NEXUS 21

TECHNOLOGY IN MOTION

Model L-75ix

Installation Manual

Table of Contents

Safety Information ..... Pg. 3
Parts List ..... Pg. 4
Before You Begin ..... Pg. 7
Pre-Installation ..... Pg. 8
Upper Assembly ..... Pg. 13
Upper Assembly Installation ..... Pg. 17
Lower Assembly Installation ..... Pg. 25
Cable Management & System Setup ..... Pg. 27
TV Mounting ..... Pg. 44
Lid Installation ..... Pg. 51
Finishing Touches ..... Pg. 59
System Setup ..... Pg. 61
Integration Information ..... Pg. 63

Safety Information

WARNINGS:

1. Do not use this product for any application other than those specified by Nexus 21.
2. Do not exceed the weight capacity. This can result in serious personal injury or damage to the equipment. It is the installer's responsibility to ensure that the total combined weight of all attached components does not exceed that of the maximum figure stated.
3. Follow all technical specifications and instructions during the installation.
4. Only use attachments/accessories specified by the manufacturer.
5. Close supervision is necessary when this system is being used by, or near, children, or disabled persons.
6. It is the responsibility of the installer to warn all potential users of the dangers of interfering with the mechanism during operation.
7. Read all technical instructions fully before installation and use. It is the installer's responsibility to ensure that all documentation is passed on the users and read fully before operation.
8. Failure to provide adequate structural strengthening, prior to installation can result in serious personal injury or damage to the equipment. It is the installer's responsibility to ensure the structure to which the Lift System is affixed can support four times the weight of the system.
9. Risk of electric shock. Do not attempt to open the Control Box.
10. To reduce risk of fire or electric shock, do not expose parts to rain or other liquids.
11. Protect the power cord from being walked on or pinched.
12. Keep all documentation.
13. Heed all warnings.
14. Clean only with a dry cloth.
15. Refer all service questions to Nexus 21 if the system does not operate normally.

Nexus 21 disclaims any liability for modifications, improper installations, or installations over the specified weight range. Nexus 21 will not be liable for any damages arising out of the use of, or inability to use, Nexus 21 products. Nexus 21 bears no responsibility for incidental or consequential damages. This includes, but is not limited to, any labor charges for the servicing of Nexus 21 products performed by anyone other than Nexus 21.

Nexus 21 intends to make this and all documentation as accurate as possible. However, Nexus 21 makes no claim that the information contained herein covers all details, conditions or variations, nor does it provide for every possible contingency in connection with the installation or use of this product. The information contained in this document is subject to change without prior notice or obligation of any kind. Nexus 21 makes no representation of warranty, expressed or implied, regarding the information contained herein. Nexus 21 assumes no responsibility for accuracy, completeness or sufficiency of the information contained in this document.

Parts List:

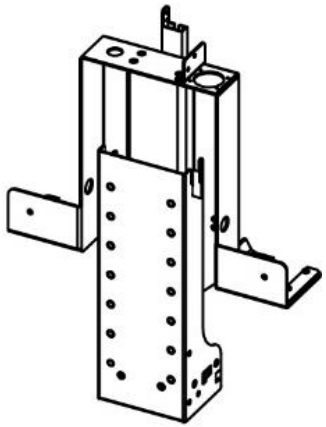

Lower Assembly

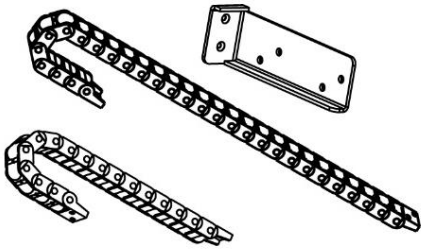

Upper Cable Track Bracket

Upper Cable Track – Long

Upper Cable Track – Short

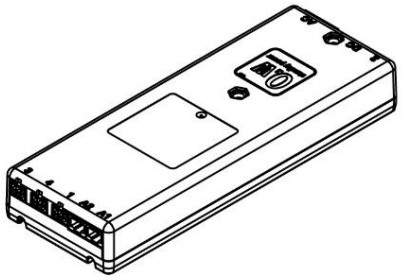

Control Box

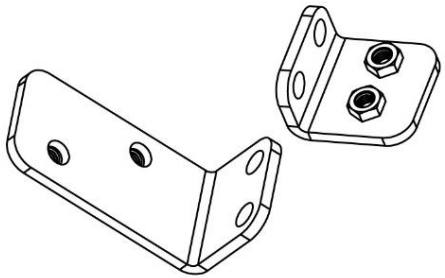

Lower Cable Track Brackets

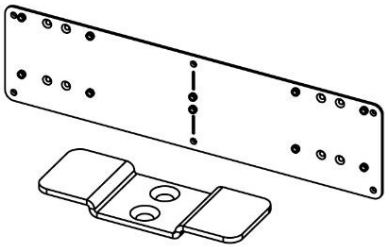

Above Enclosure Bracket

Install Hook

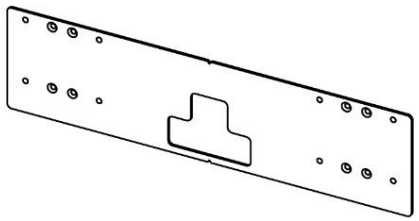

Top Beam Support

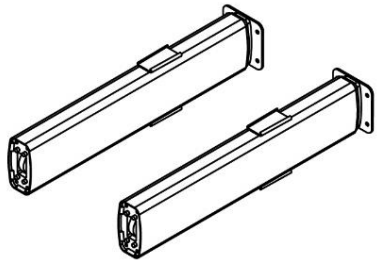

Column Assemblies

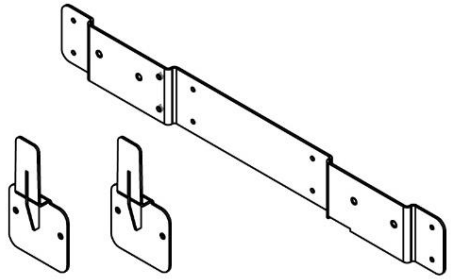

Rear Support Bracket

Bayonet Sleeves

Parts List Continued:

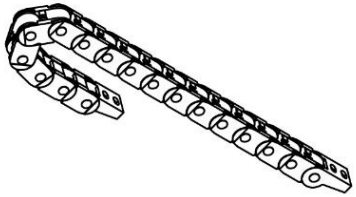

Lower Cable Track

Cable Sleeve Pipe

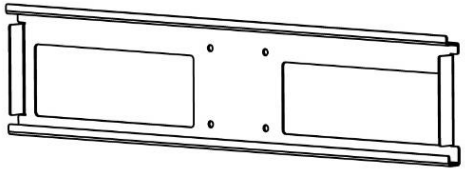

Screen Back Plate

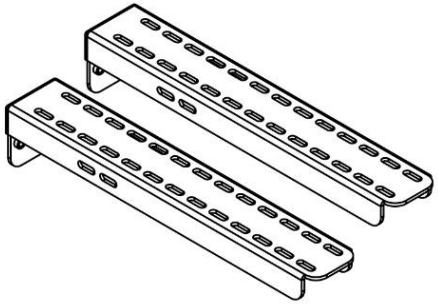

Cable Track Brackets

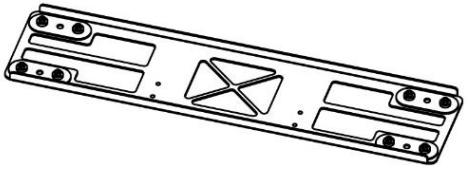

Lid Plate

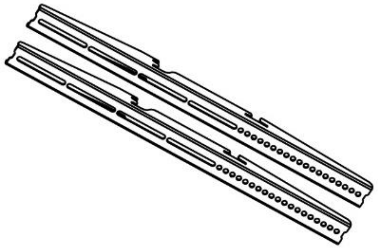

Vertical Mounting Bars

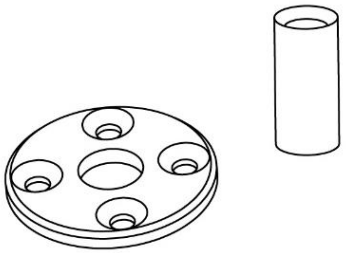

Lid Mounting Disc

Stabilization Mount

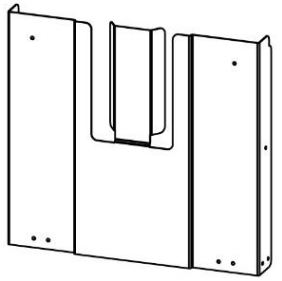

Front Cover

Hardware List:

Cable Management Hardware Pack:

- (12) – BHMS M5 X 10mm
- (4) – SHMS M4 x 8mm
- (2) – FHMS M3 x 10mm
- (2) – FHWS #10 x 1-3/4"
- (2) – Velcro Hook & Loop Strips
- (4) – Wire Clips
- (4) – Zip Ties

Tools:

- (1) – 7/32" hex key
- (1) – 4mm hex key
- (1) – 3mm hex key
- (1) – 2.5mm hex keys
- (1) – 2mm hex key

Lid Installation Hardware:

- (16) – #6 x 1/2" FHWS Screws
- (4) – SHMS 5/16"-18 X 1-1/2
- (4) – SHMS 5/16"-18 X 3/8"
- (4) – 2.5 LG Spring
- (4) – Lid Mounting Disc
- (4) – Stabilization Mount
- (4) – Dowel Centers

TV Mounting Hardware:

- (4) – BHMS 3/8"-16 x 3/4"
- (6) – BHMS M6 X 10mm
- (4) – FHMS M6 x 12mm
- (1) – Large Assorted Hardware Pack

Front Cover Hardware:

- (2) – BHMS M6 x 10mm

Upper Assembly Hardware:

- (8) – FHMS M6 x 30mm
- (8) – FHMS M6 x 16mm
- (4) – BHMS M6 X 10mm
- (4) – BHMS M5 X 10mm
- (8) – THWS #10 x 3/4"
- (2) – FHWS #8 x 3/4"

Pre-Installation Hardware:

- (2) – FHMS M6 x 30mm
- (6) – FHWS #8 x 3/4"

Lower Assembly Hardware:

- (8) – FHMS M6 x 16mm

Before you Begin:

Important: Consult a licensed General Contractor for questions that pertain to construction, weight and materials to be used for your enclosure. Refer to the L-75ix Dimensional Drawing to determine interior sizing of your enclosure.

Minimum Lift System Extension: 48″ [122 cm]

Maximum Lift System Extension: 52″ [132 cm]

Maximum Screen Size: 75″

Maximum Lift System Weight Capacity: 100 lbs [45.4 kg] (TV plus Lid)

Maximum Motorized Swivel: Up to 180° in either direction

Support Info

Mon – Thu: 7 AM to 4 PM

Fri: 7 AM to 3 PM

Sat & Sun: Closed

Ph: 480 - 306 - 5462

Email: support@nexus21.com

Office Info

16121 N 78th St

Scottsdale, AZ 85260

Ph: 480 - 951- 6885

Website: www.nexus21.com

Email: info@nexus21.com

Pre-Installation

Parts List:

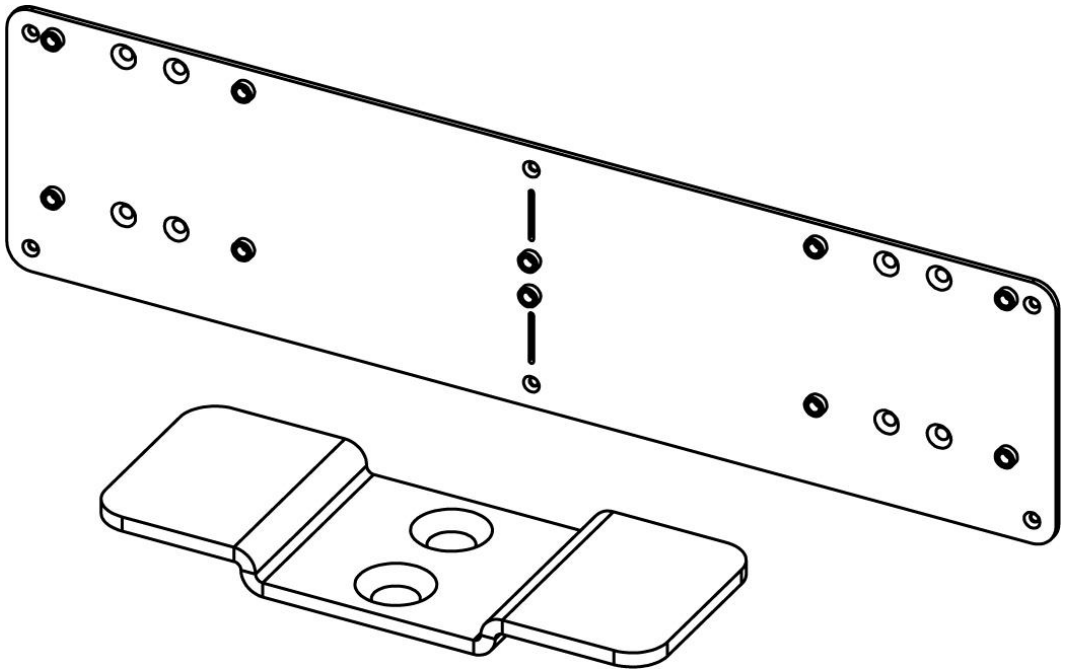

Required Parts & Hardware:

- Above Enclosure Plate
- Install Hook

- Pre-Installation Hardware Pack
  - (2) – FHMS M6 x 30mm
  - (6) – FHWS #8 x 3/4"

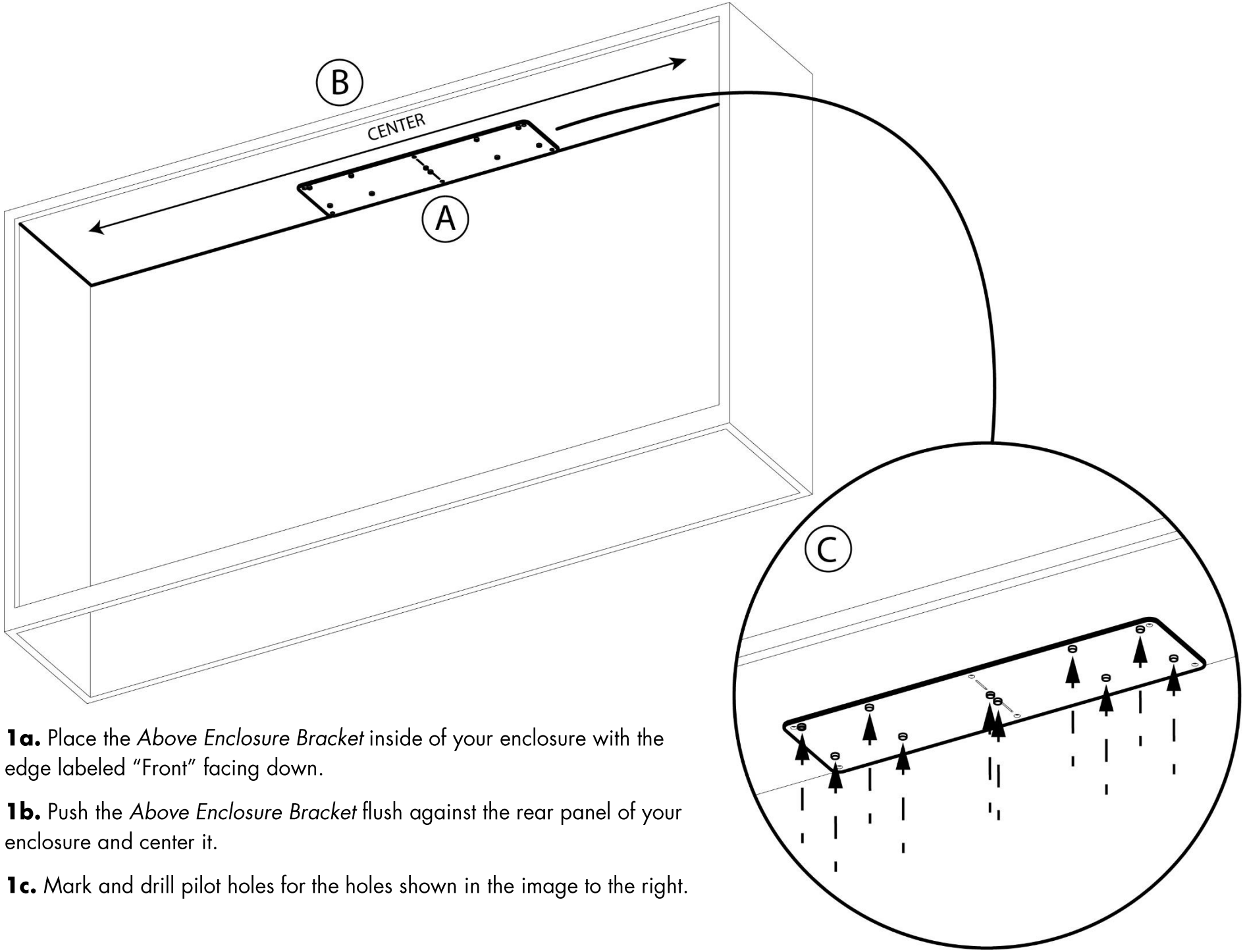

1a. Place the *Above Enclosure Bracket* inside of your enclosure with the edge labeled "Front" facing down.

1b. Push the *Above Enclosure Bracket* flush against the rear panel of your enclosure and center it.

1c. Mark and drill pilot holes for the holes shown in the image to the right.

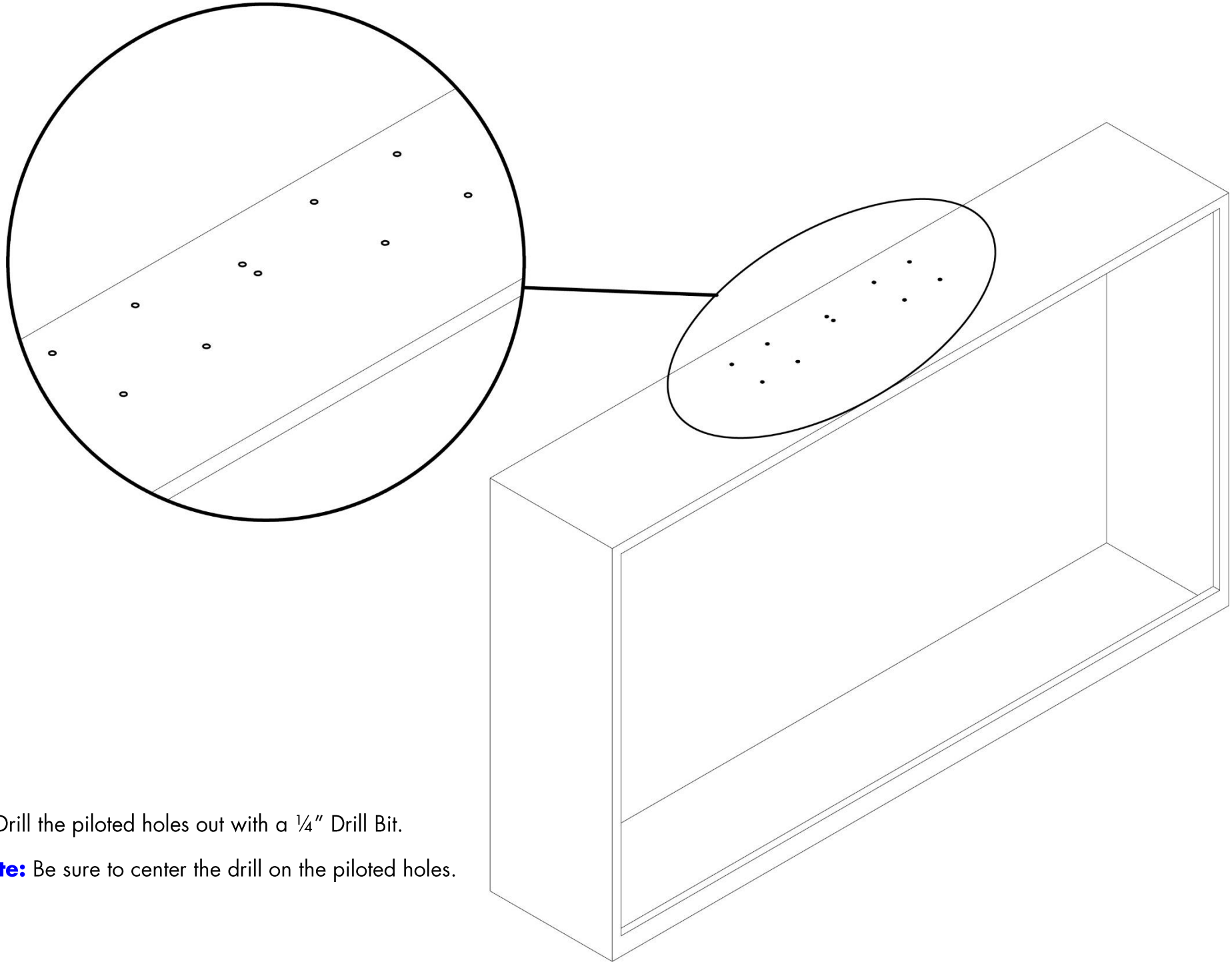

2. Drill the piloted holes out with a ¼" Drill Bit.

Note: Be sure to center the drill on the piloted holes.

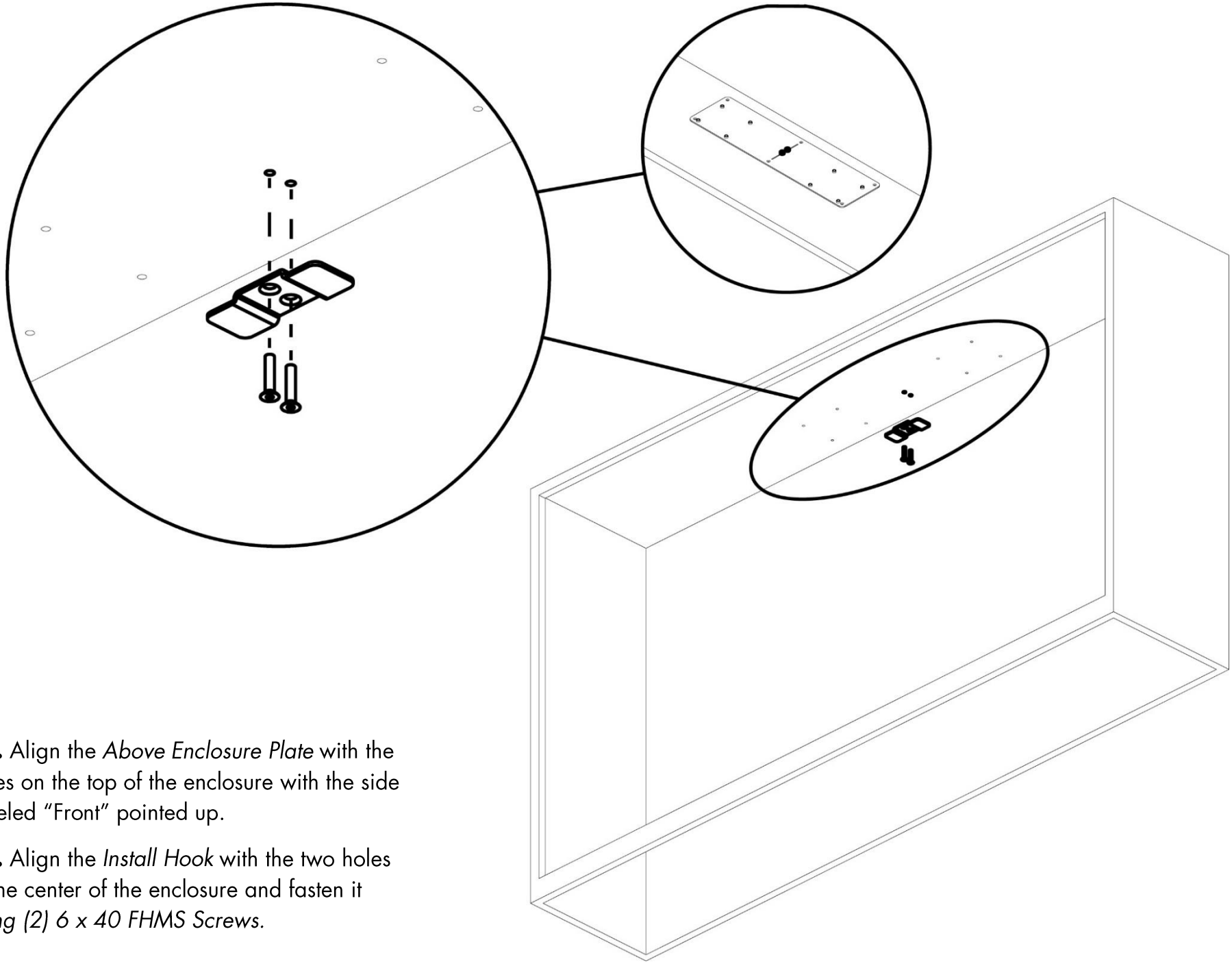

3a. Align the *Above Enclosure Plate* with the holes on the top of the enclosure with the side labeled "Front" pointed up.

3b. Align the *Install Hook* with the two holes in the center of the enclosure and fasten it *using (2) 6 x 40 FHMS Screws.*

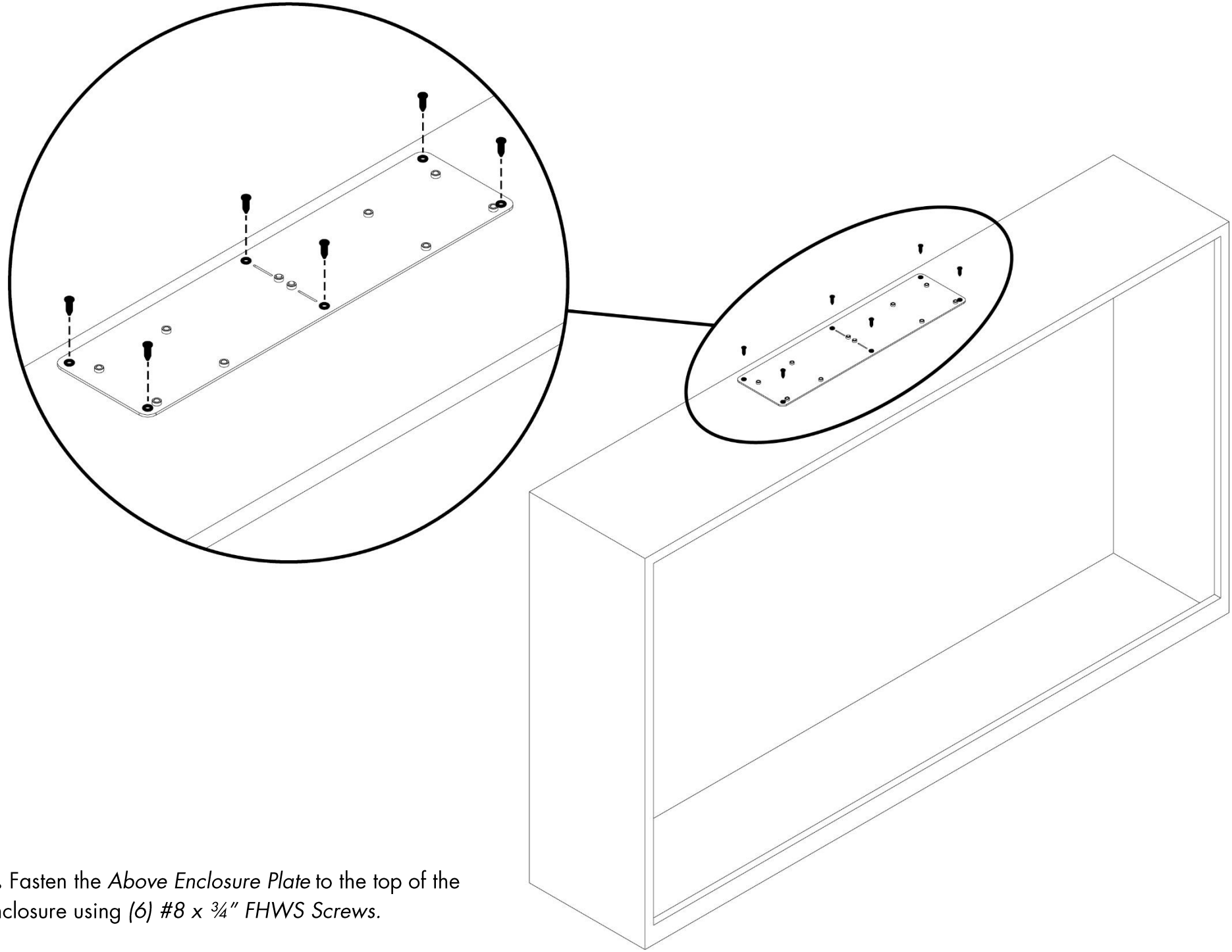

4. Fasten the *Above Enclosure Plate* to the top of the enclosure using *(6) #8 x ¾" FHWS Screws.*

Upper Assembly

Parts List:

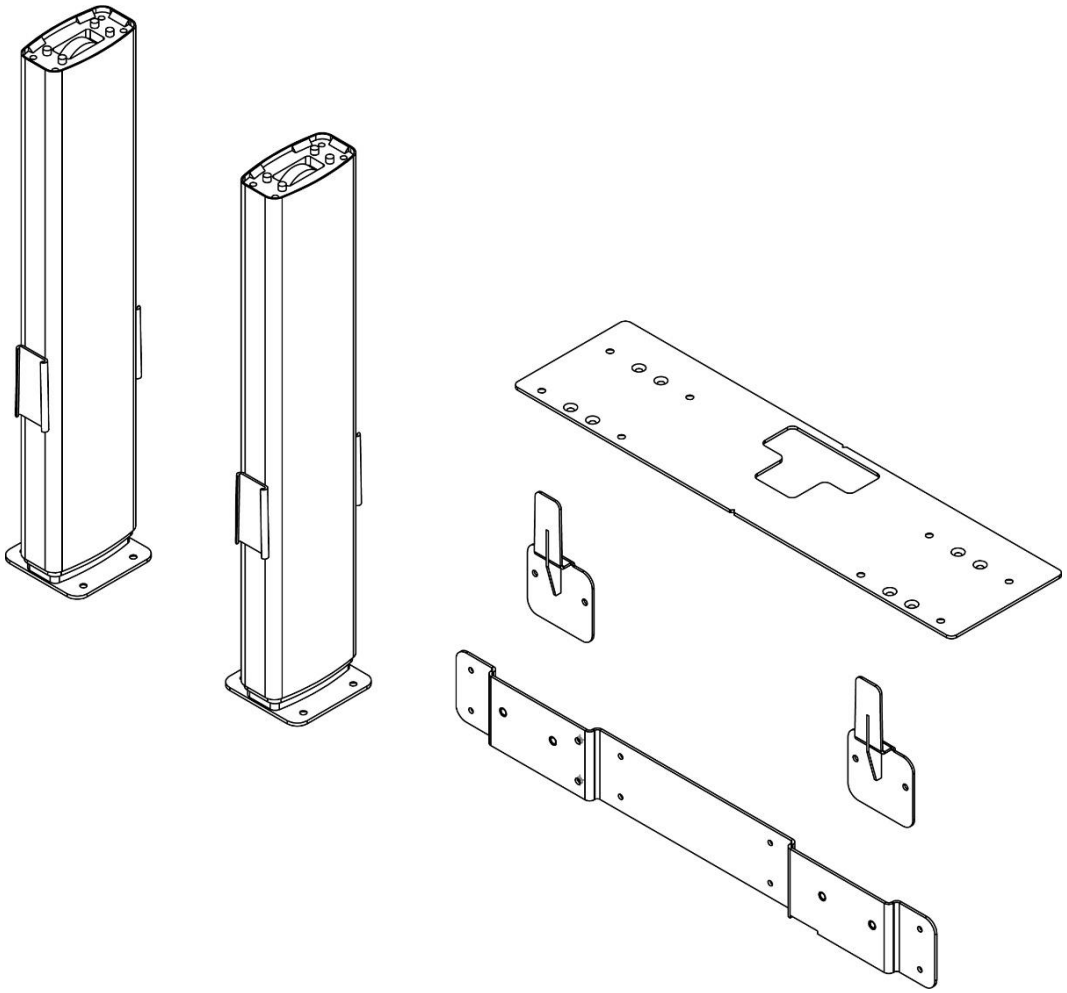

Required Parts & Hardware:

- (2) Column Assemblies
- (2) Bayonet Sleeves
- Rear Support Bracket
- Top Beam Support

- Upper Assembly Hardware
    - (8) – FHMS M6 x 16mm
    - (4) – BHMS M6 X 10mm

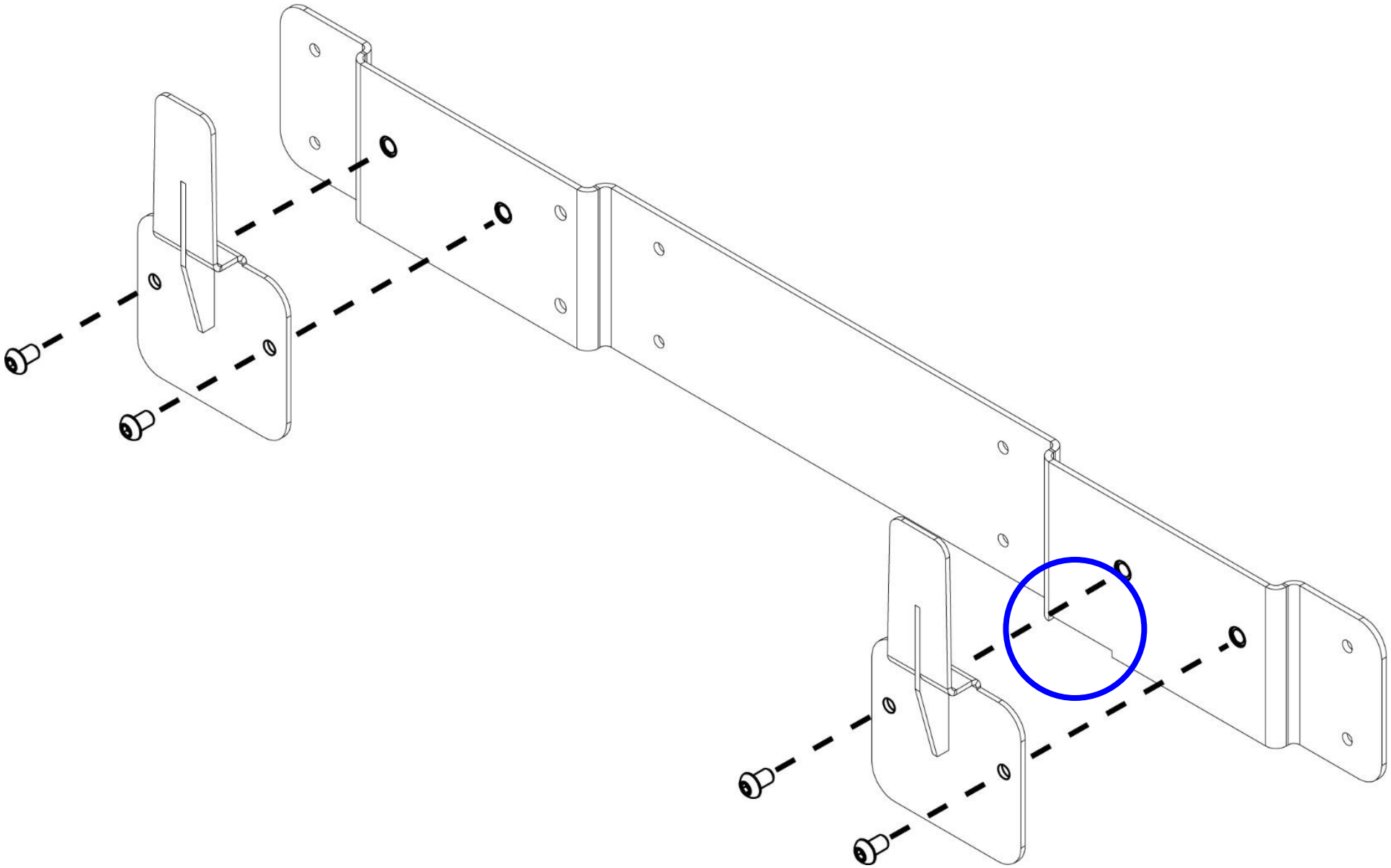

5. Fasten each *Bayonet Sleeve* to the *Rear Support Bracket* using *(4) 6 x 10 BHMS Screws.*

Note: Use the Notch circled in the image above to ensure proper orientation.

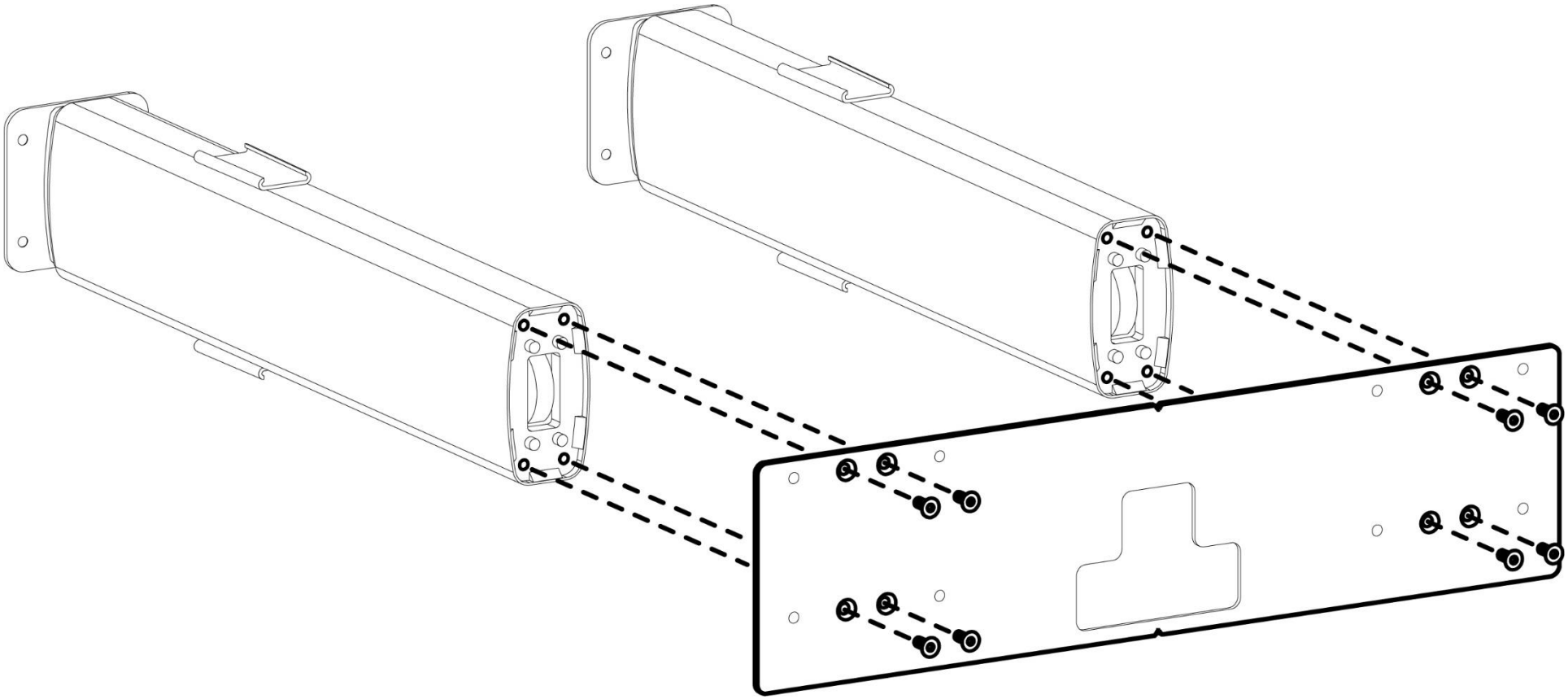

6. Fasten the *Top Beam Support* to the top of the *Column Assemblies* using *(8) 6 x 16 FHMS Screws.*

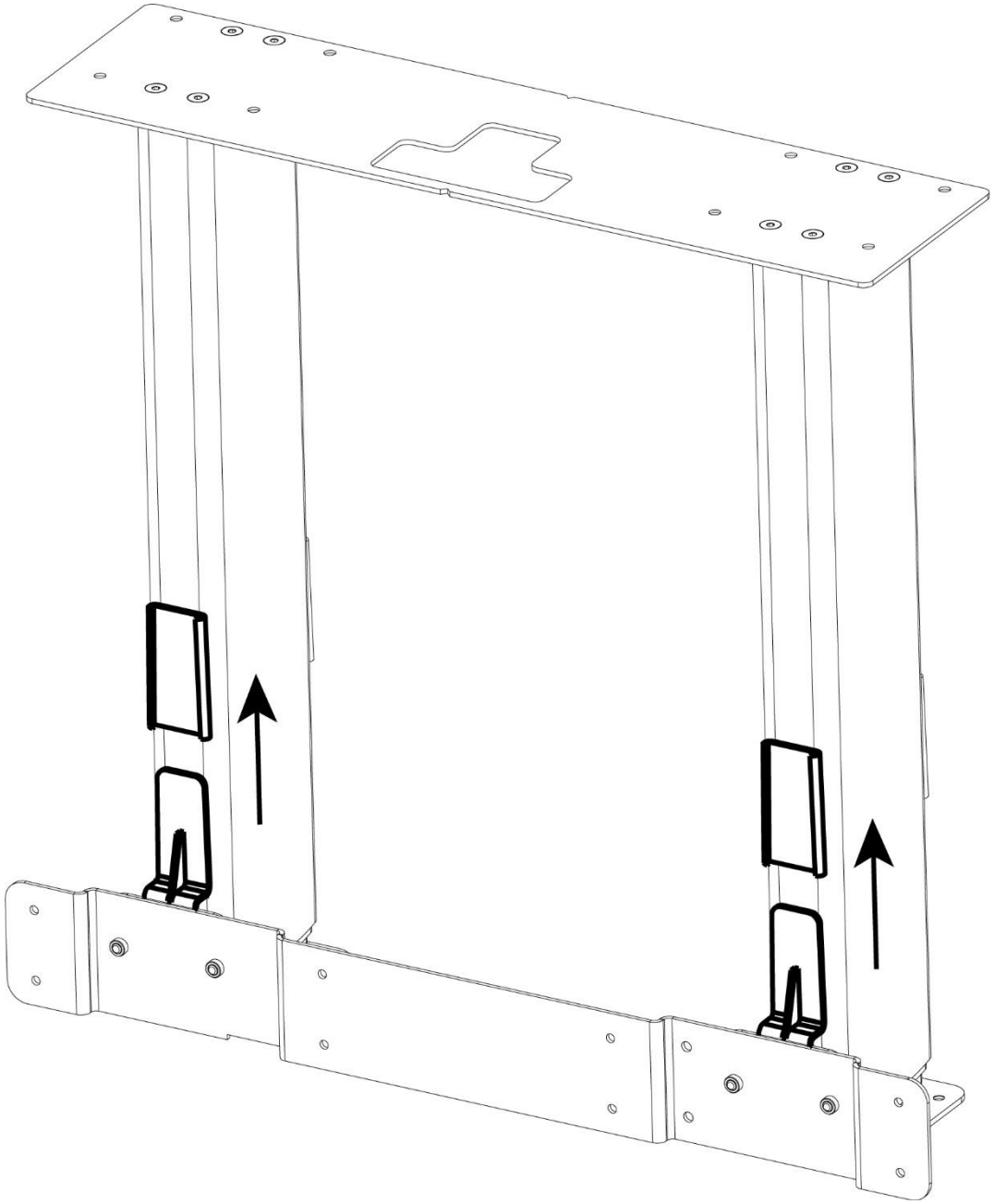

7. Slide and tap the *Rear Support Assembly* up into the metal sleeves on the *Column Assemblies*.

Note: Use the picture above as a reference for proper orientation.

Upper Assembly Installation

Parts List:

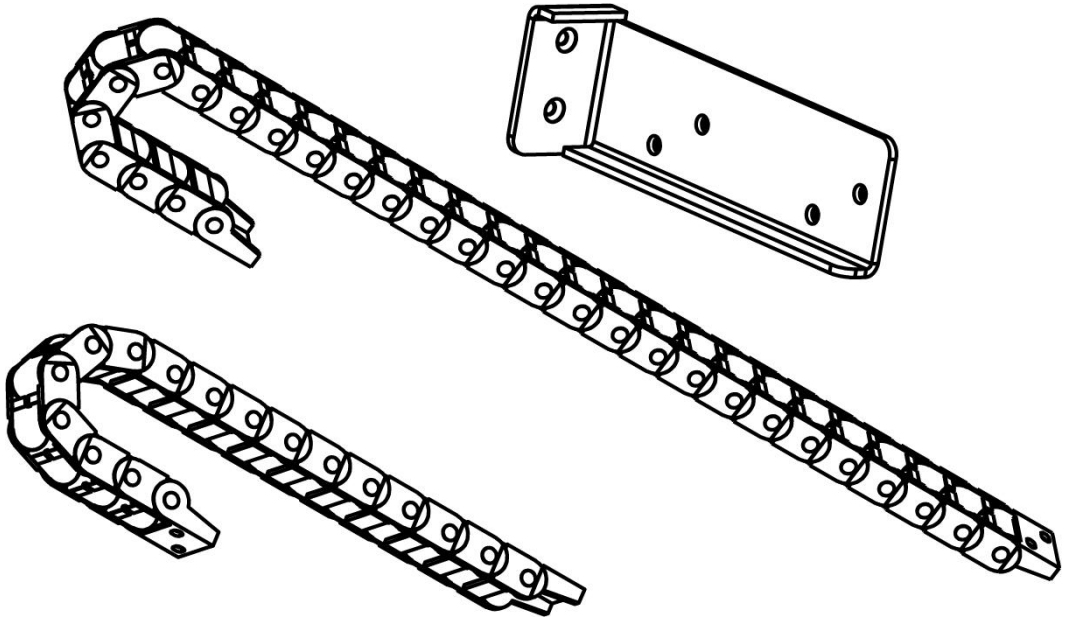

Required Parts & Hardware:

- Upper Cable Track Bracket
- Upper Cable Track Long
- Upper Cable Track Short

- (4) 4.5m Motor Cables
- Swivel Cutoff Cable

- Upper Assembly Hardware
    - (8) – FHMS M6 x 30mm
    - (4) – BHMS M5 X 10mm
    - (8) – THWS #10 x 3/4"
    - (2) – FHWS #8 x 3/4"

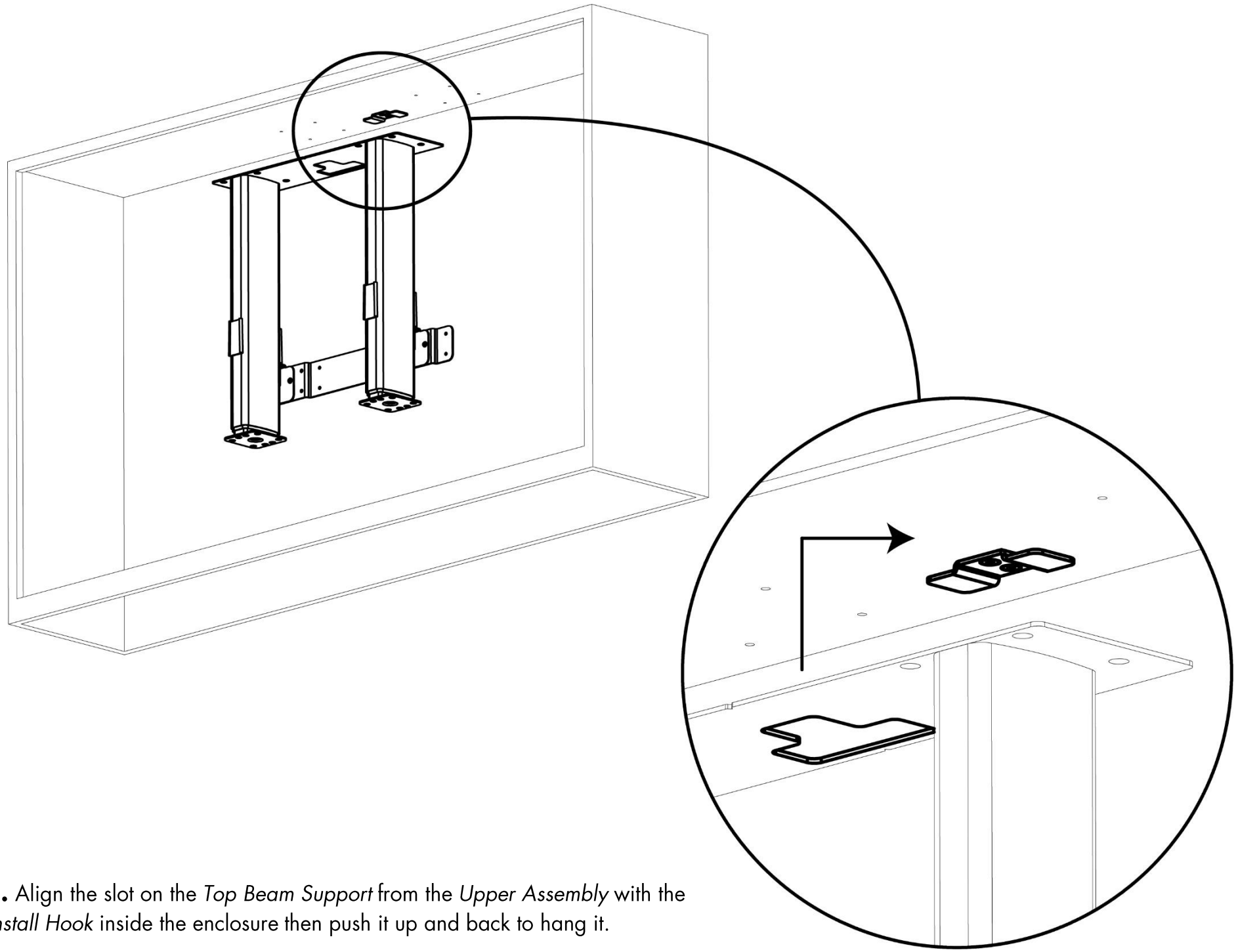

8. Align the slot on the *Top Beam Support* from the *Upper Assembly* with the *Install Hook* inside the enclosure then push it up and back to hang it.

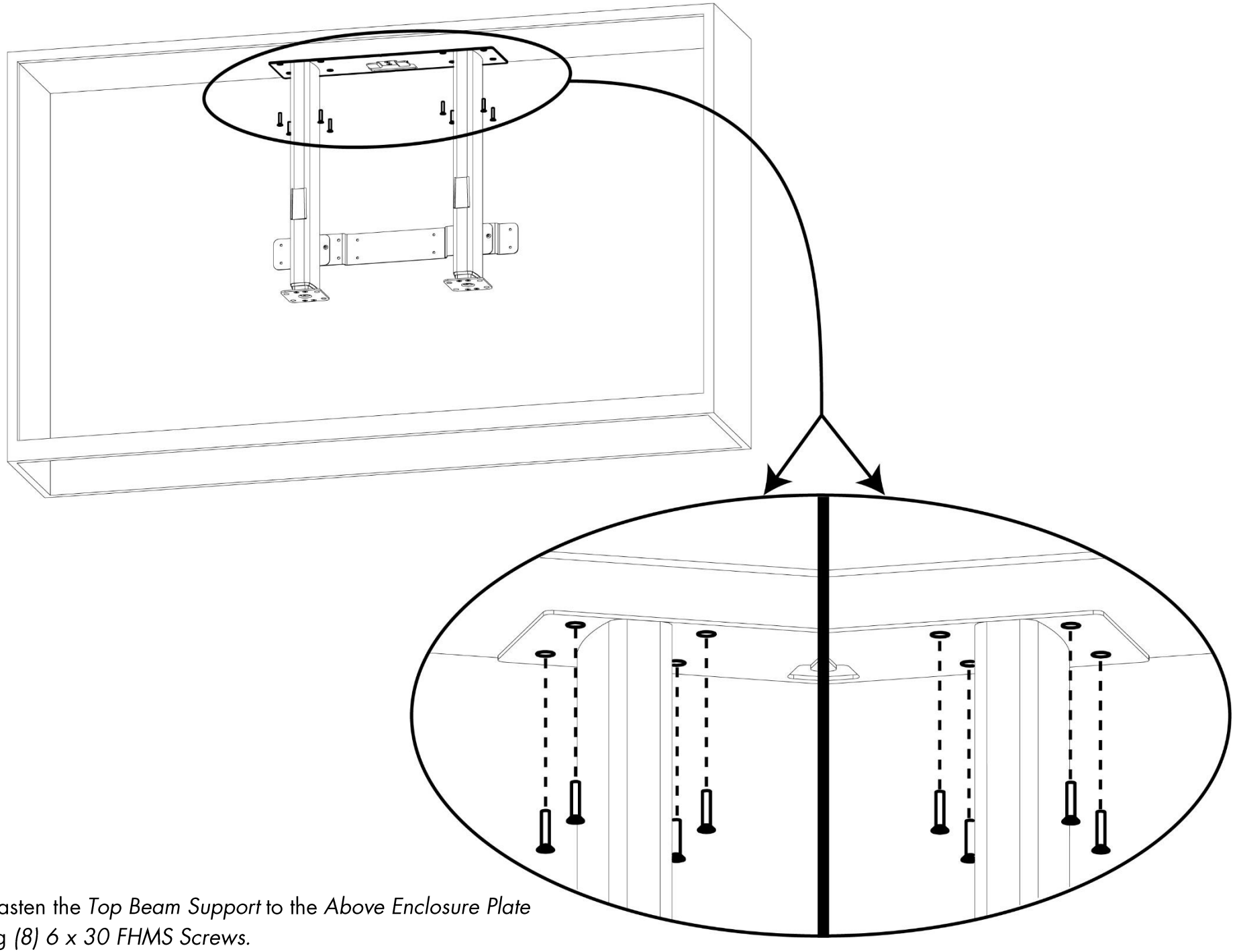

9. Fasten the *Top Beam Support* to the *Above Enclosure Plate* using *(8) 6 x 30 FHMS Screws.*

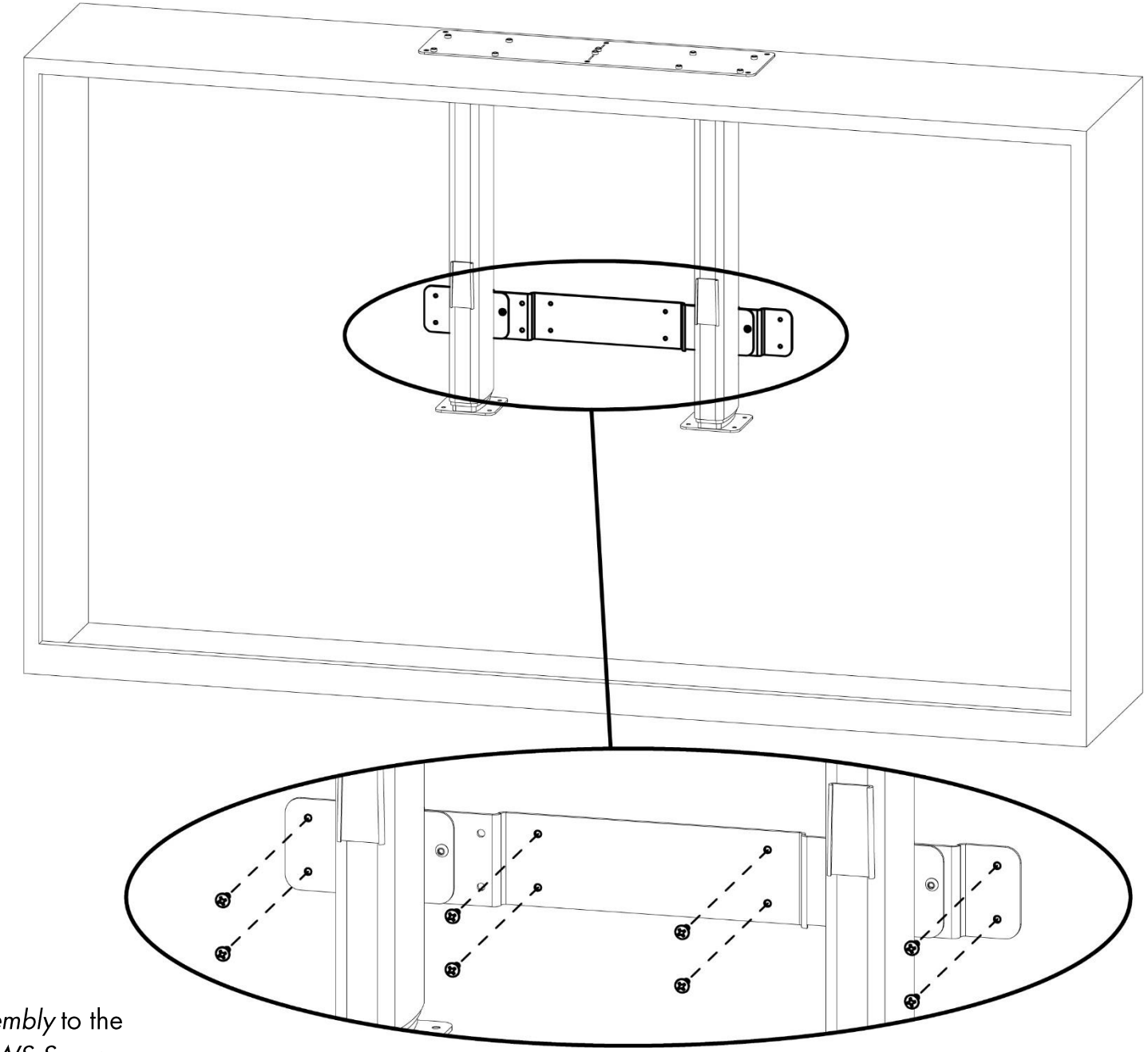

10. Fasten the *Rear Support Assembly* to the enclosure using *(8) #10 x ¾" THWS Screws.*

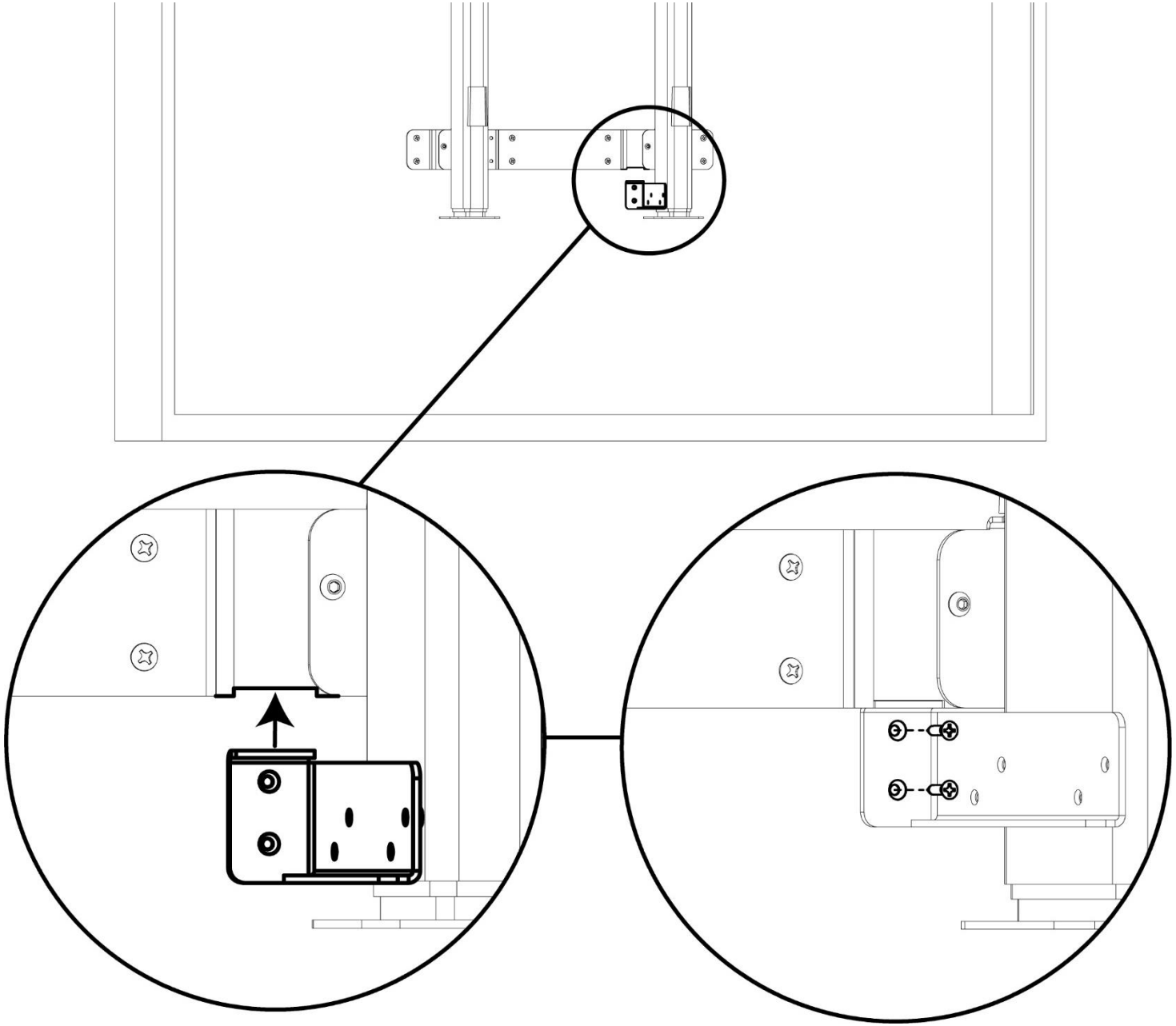

11. Fasten the *Upper Cable Track Bracket* within the notch of the *Rear Support Assembly* using *(2) #8 x ¾" FHWS Screws.*

Note: Ensure the top of the bracket is touching the *Rear Support Assembly*.

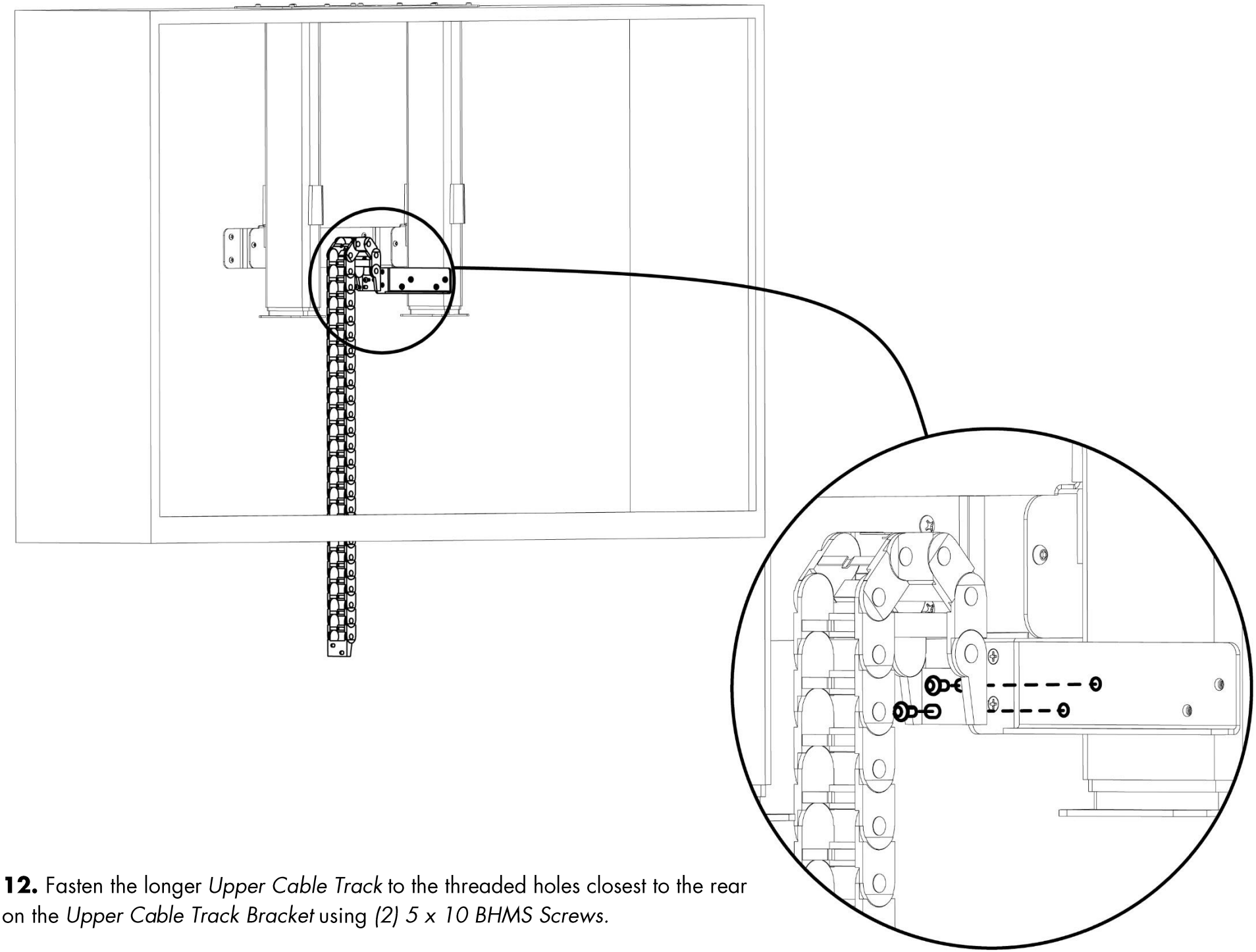

12. Fasten the longer *Upper Cable Track* to the threaded holes closest to the rear on the *Upper Cable Track Bracket* using *(2) 5 x 10 BHMS Screws*.

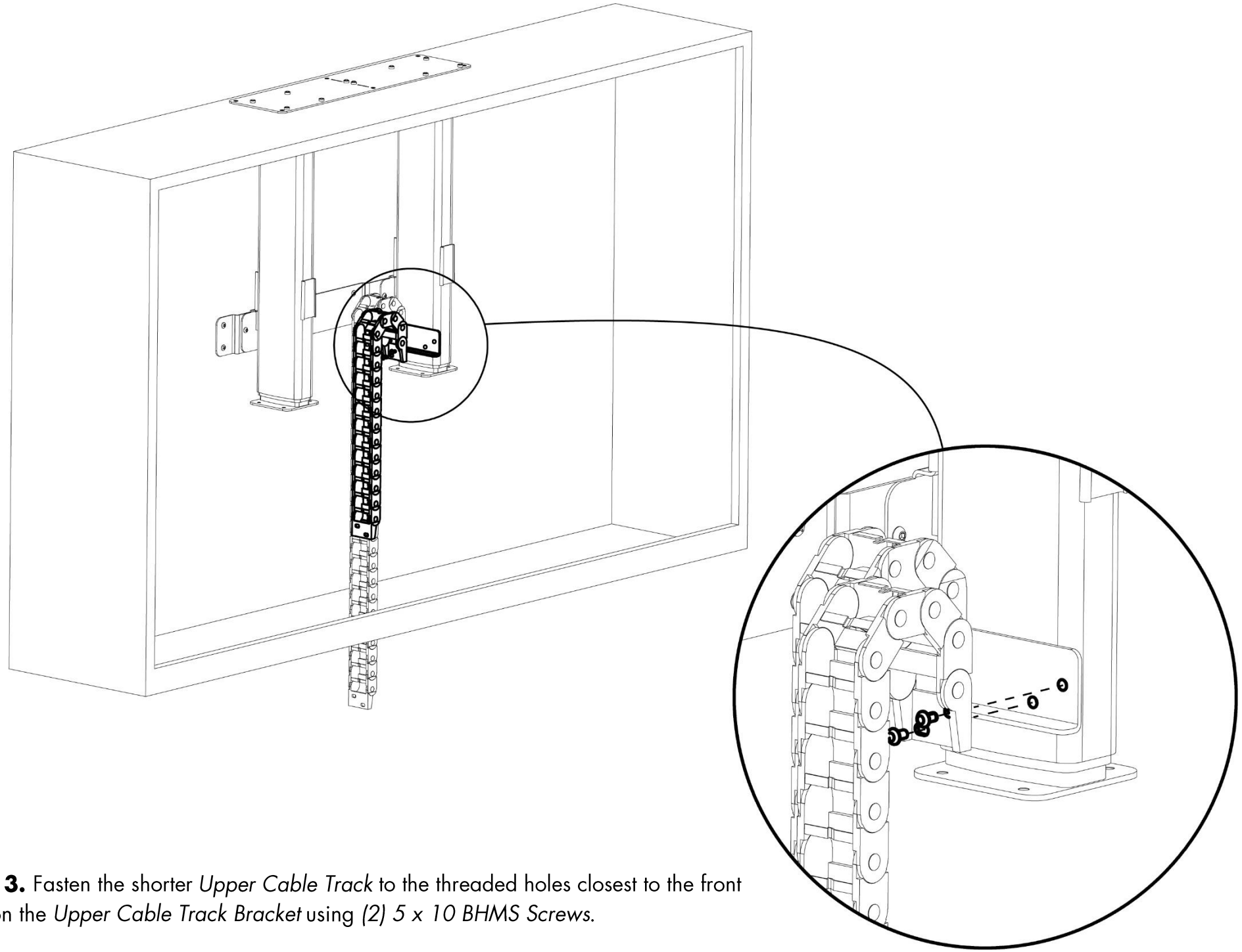

13. Fasten the shorter *Upper Cable Track* to the threaded holes closest to the front on the *Upper Cable Track Bracket* using *(2) 5 x 10 BHMS Screws.*

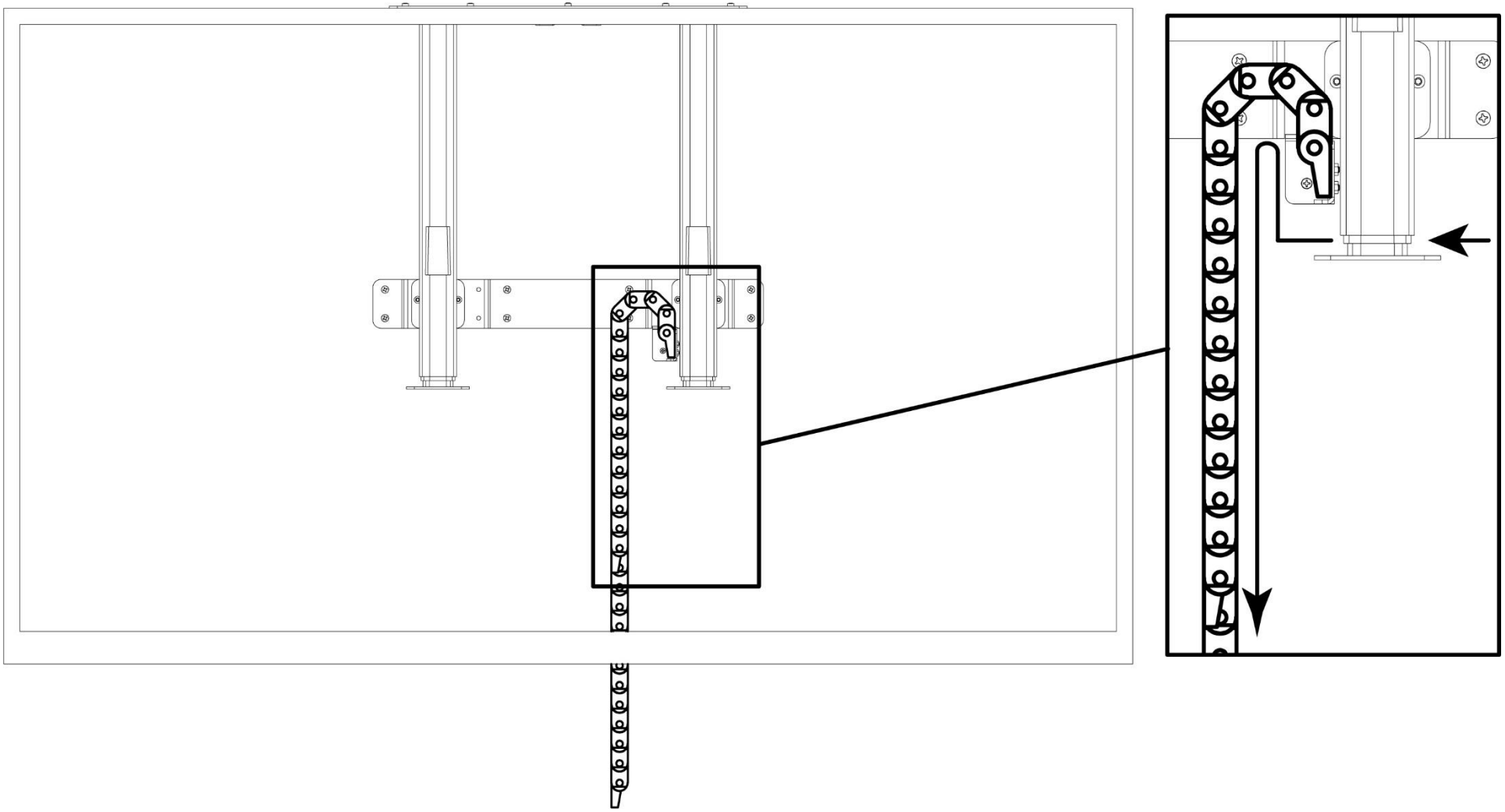

14. Starting from the right of the Upper Assembly, pass *(3) 4.5m Motor Cables* behind the right *Column Assembly* then through the longer *Upper Cable Track*.

Repeat this same process for the shorter *Upper Cable Track*, using the *(1) 4.5m Motor Cable* labeled Swivel, the *Swivel Cutoff Cable*, and any other cables needed for your TV.

Lower Assembly Installation

Parts List:

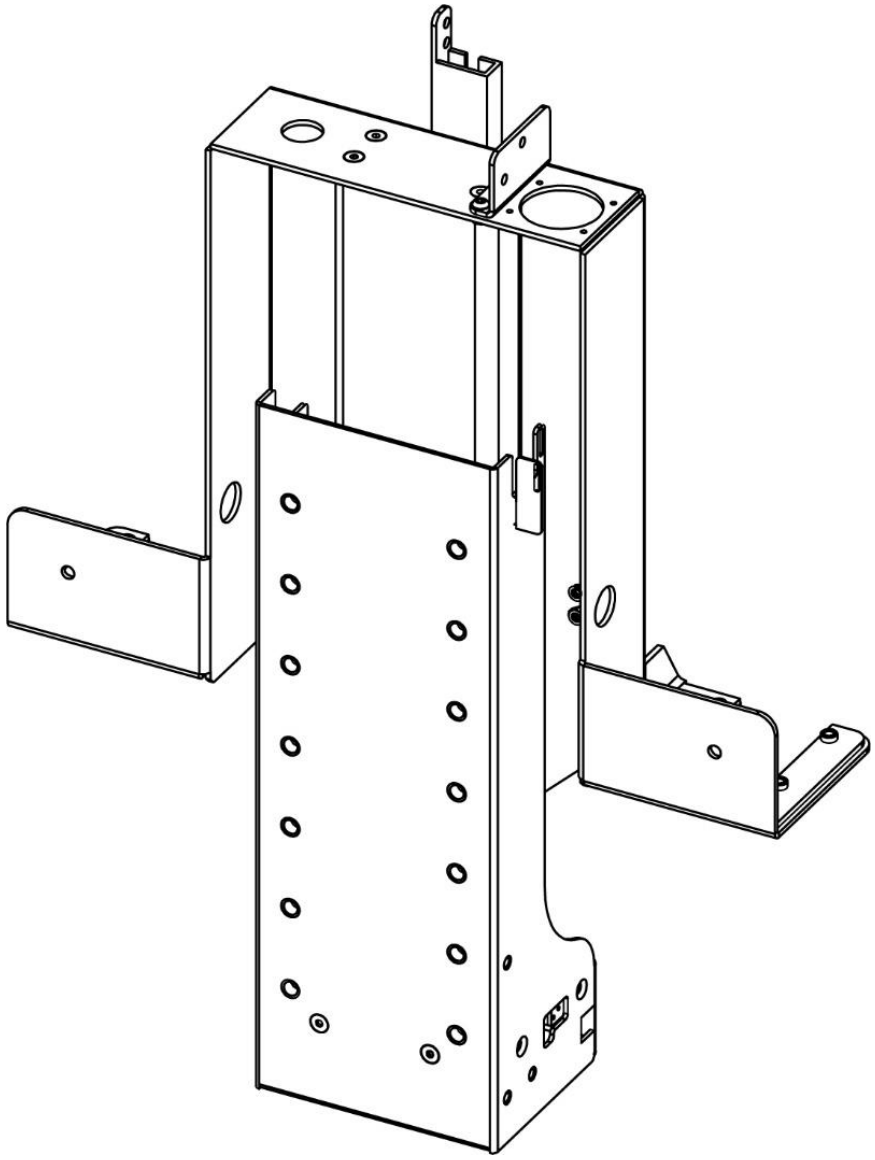

Required Parts & Hardware:

- Lower Assembly

- Lower Assembly Hardware Pack
    - (8) 6 x 16 FHMS Screws

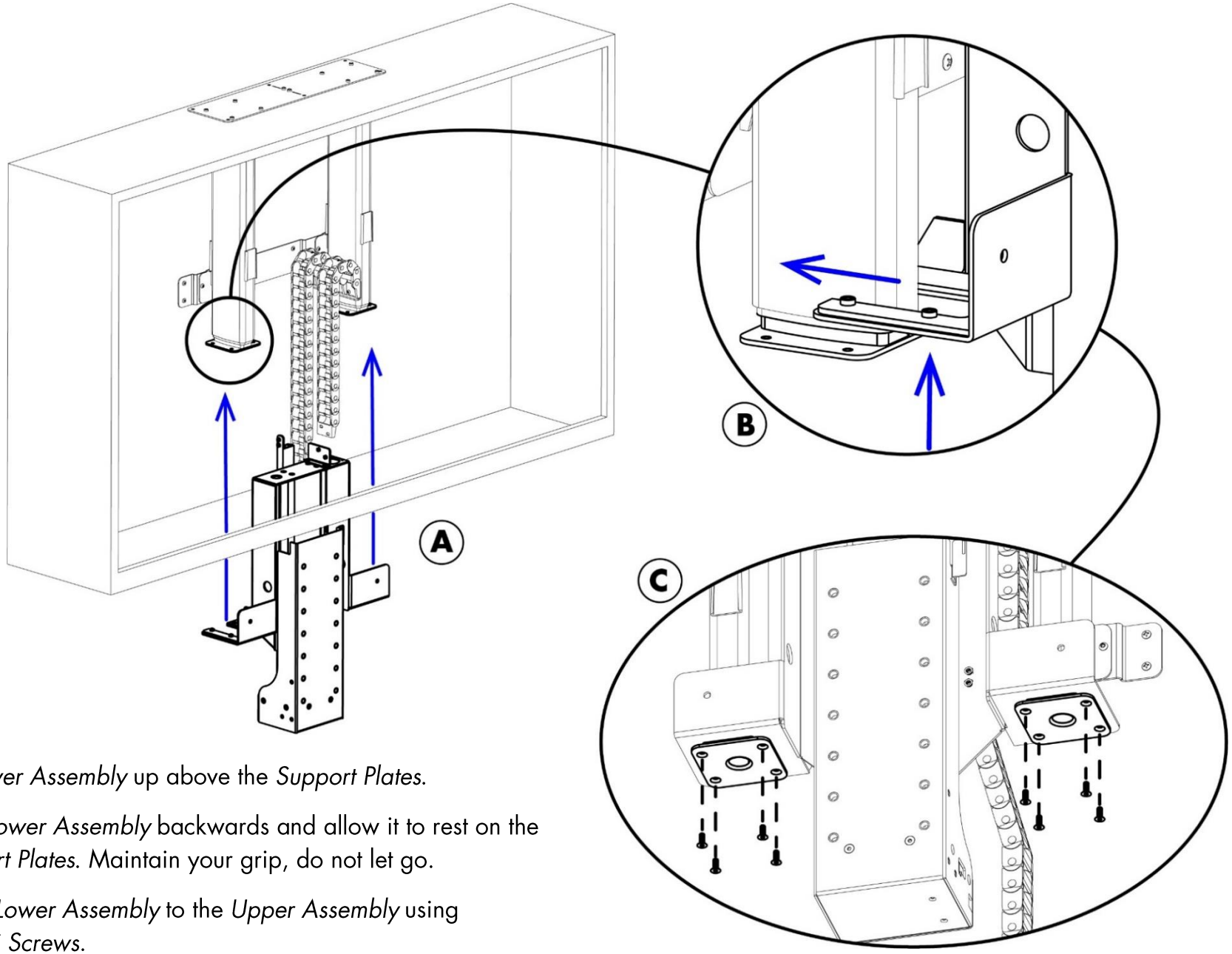

15a. Lift the *Lower Assembly* up above the *Support Plates*.

15b. Slide the *Lower Assembly* backwards and allow it to rest on the top of the *Support Plates*. Maintain your grip, do not let go.

15c. Fasten the *Lower Assembly* to the *Upper Assembly* using *(8) 6 x 16 FHMS Screws*.

Important Note: Be careful not to damage the *Swivel Cutoff Cable* and *Micro Switch* while hanging the *Lower Assembly*.

Cable Management & System Setup

Parts List:

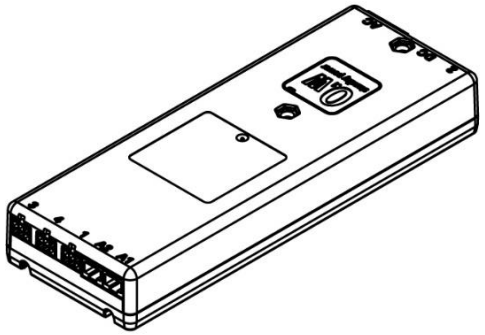

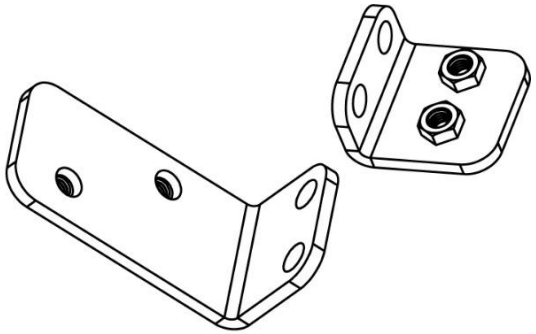

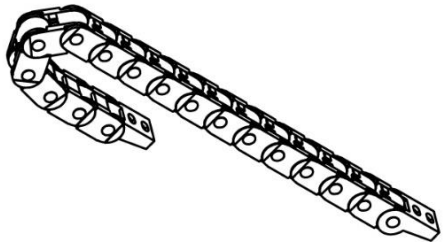

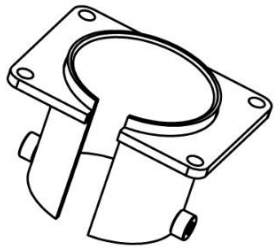

Required Parts & Hardware:

- (2) Center Cable Track Brackets
- Lower Cable Track
- Cable Sleeve Pipe
- Snakeskin
- Buckled Velcro Strap (Inside Small White Box)

- Control Box
- RF Control Kit
- Power Cable

- Cable Management Hardware Pack
    - (12) – BHMS M5 X 10mm
    - (4) – SHMS M4 x 8mm
    - (2) – FHMS M3 x 10mm
    - (2) – FHWS #10 x 1-3/4"
    - (2) – Velcro Hook & Loop Strips
    - (4) – Wire Clips
    - (4) – Zip Ties

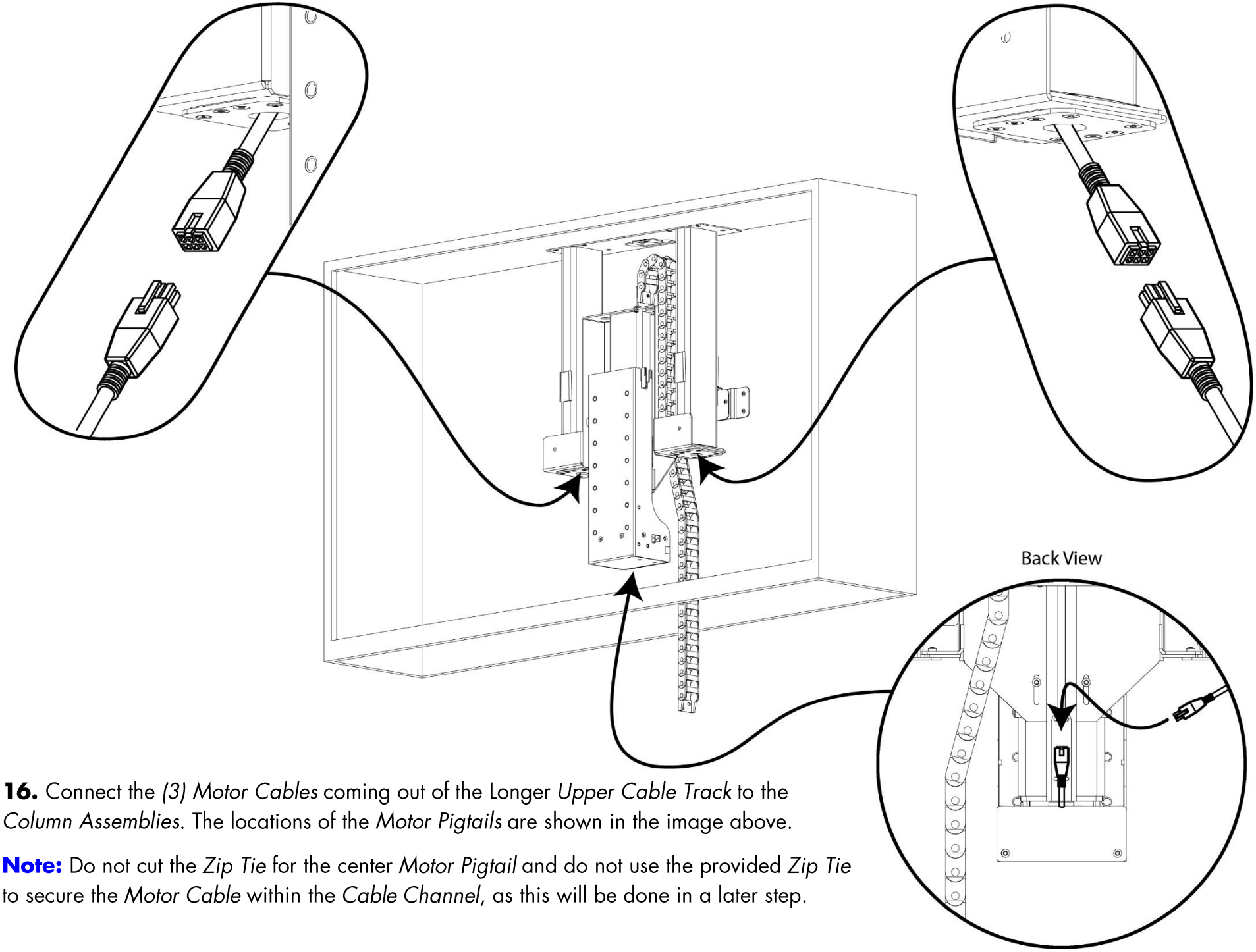

16. Connect the *(3) Motor Cables* coming out of the Longer *Upper Cable Track* to the *Column Assemblies*. The locations of the *Motor Pigtails* are shown in the image above.

Note: Do not cut the *Zip Tie* for the center *Motor Pigtail* and do not use the provided *Zip Tie* to secure the *Motor Cable* within the *Cable Channel*, as this will be done in a later step.

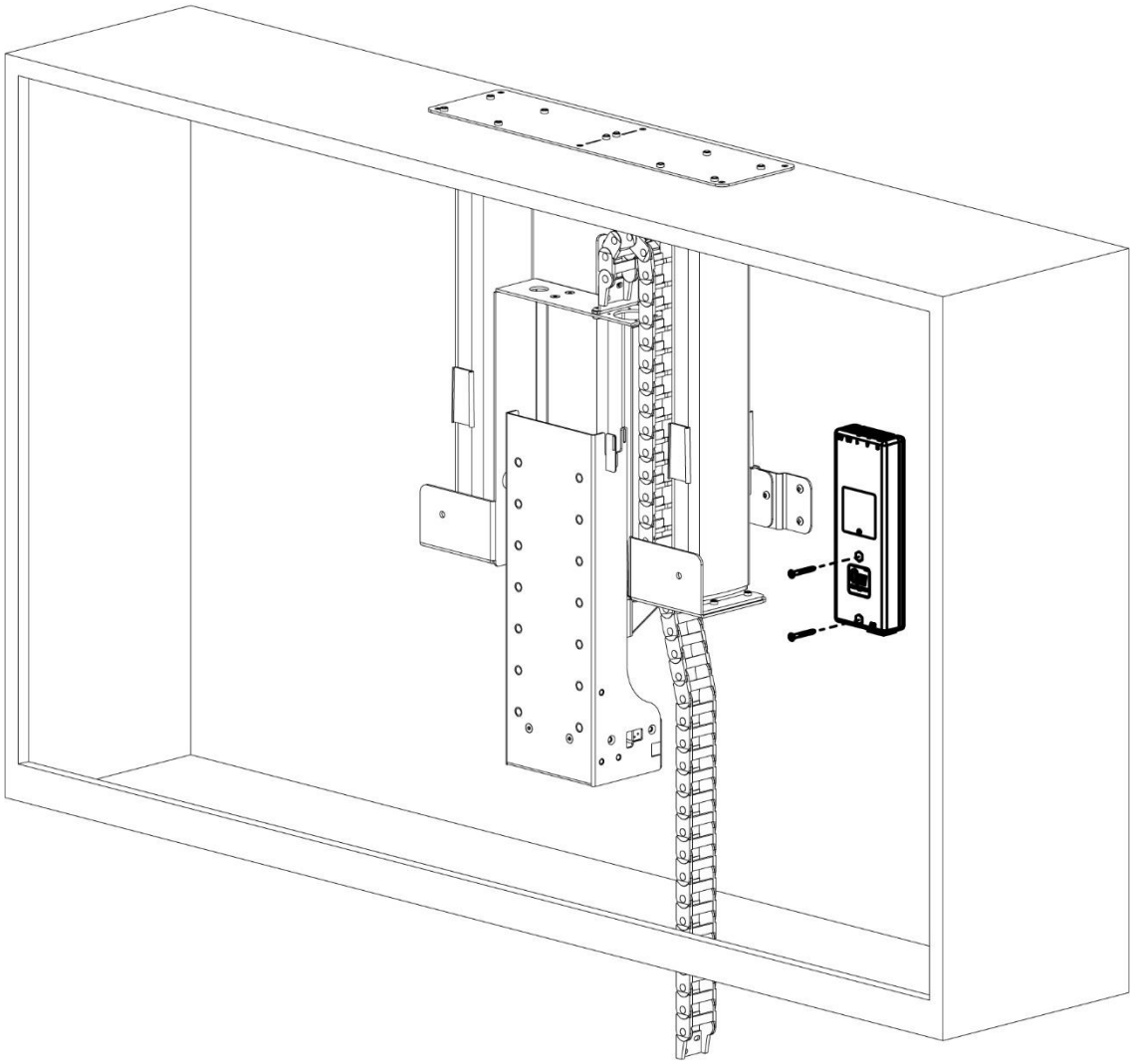

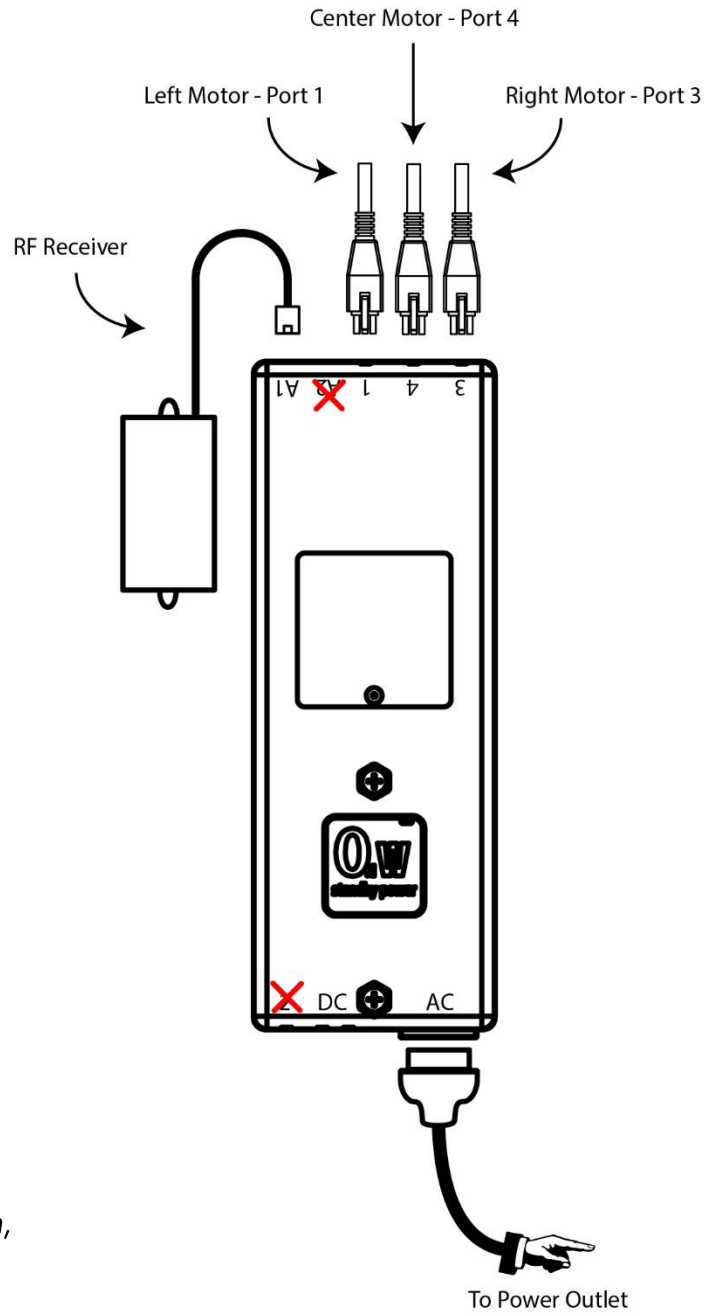

17a. Mount your *Control Box* inside of the enclosure and to the right of the *Lift System*, using *(2) #10 x 1-3/4" FHWS Screw*.

17b. Connect the (3) *Column Assemblies* and *RF Receiver* to the *Control Box* using the diagram on the right of this page.

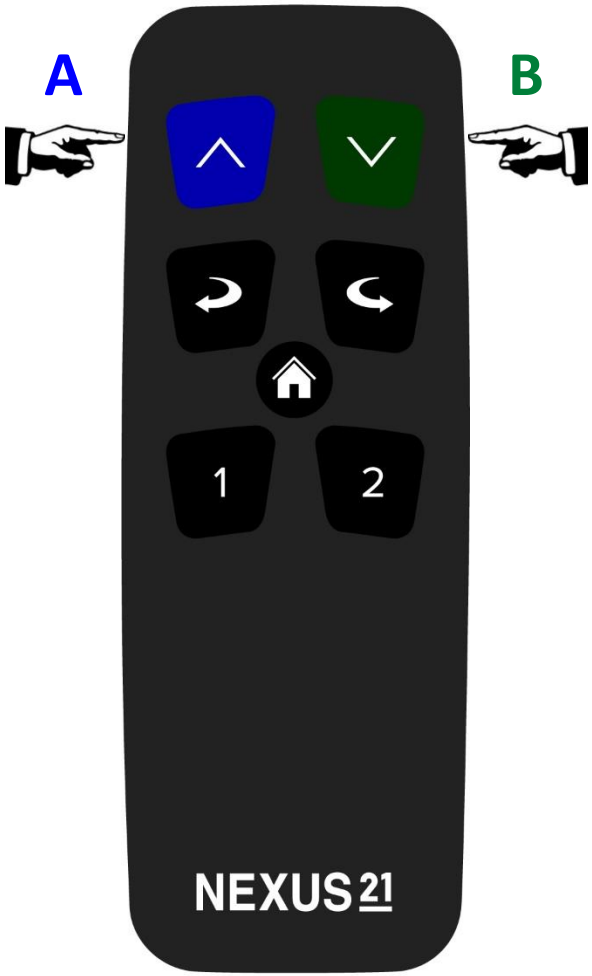

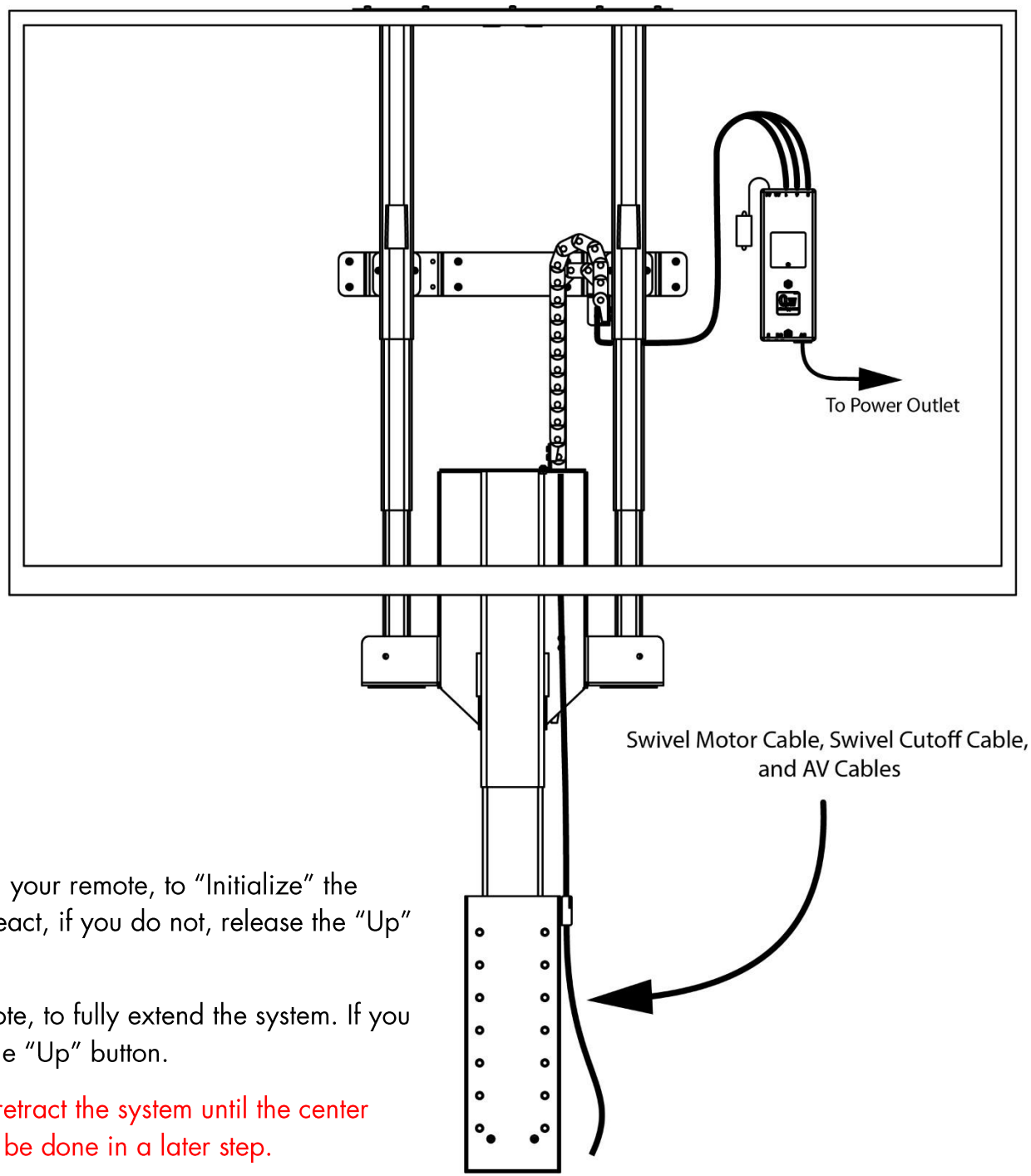

18a. Press the and hold the "Up" button on your remote, to "Initialize" the system. You should see or hear the system react, if you do not, release the "Up" button and repeat this step.

18b. Press the "Down" button on your remote, to fully extend the system. If you need to stop the system at any time, press the "Up" button.

Important Note: You will not be able to retract the system until the center position of the swivel has been set. This will be done in a later step.

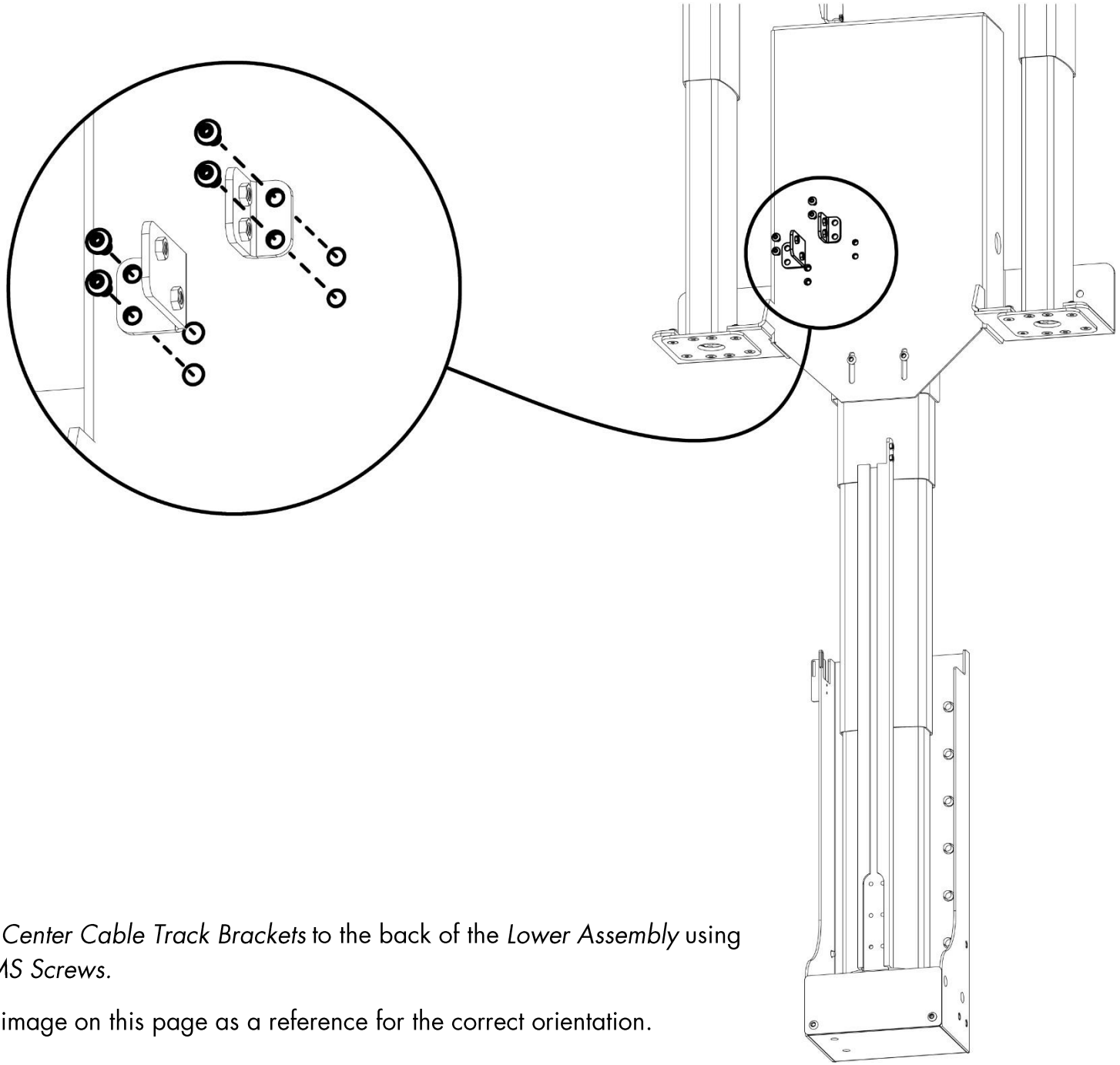

19. Fasten the *Center Cable Track Brackets* to the back of the *Lower Assembly* using *(4) 5 x 10 BHMS Screws.*

Note: Use the image on this page as a reference for the correct orientation.

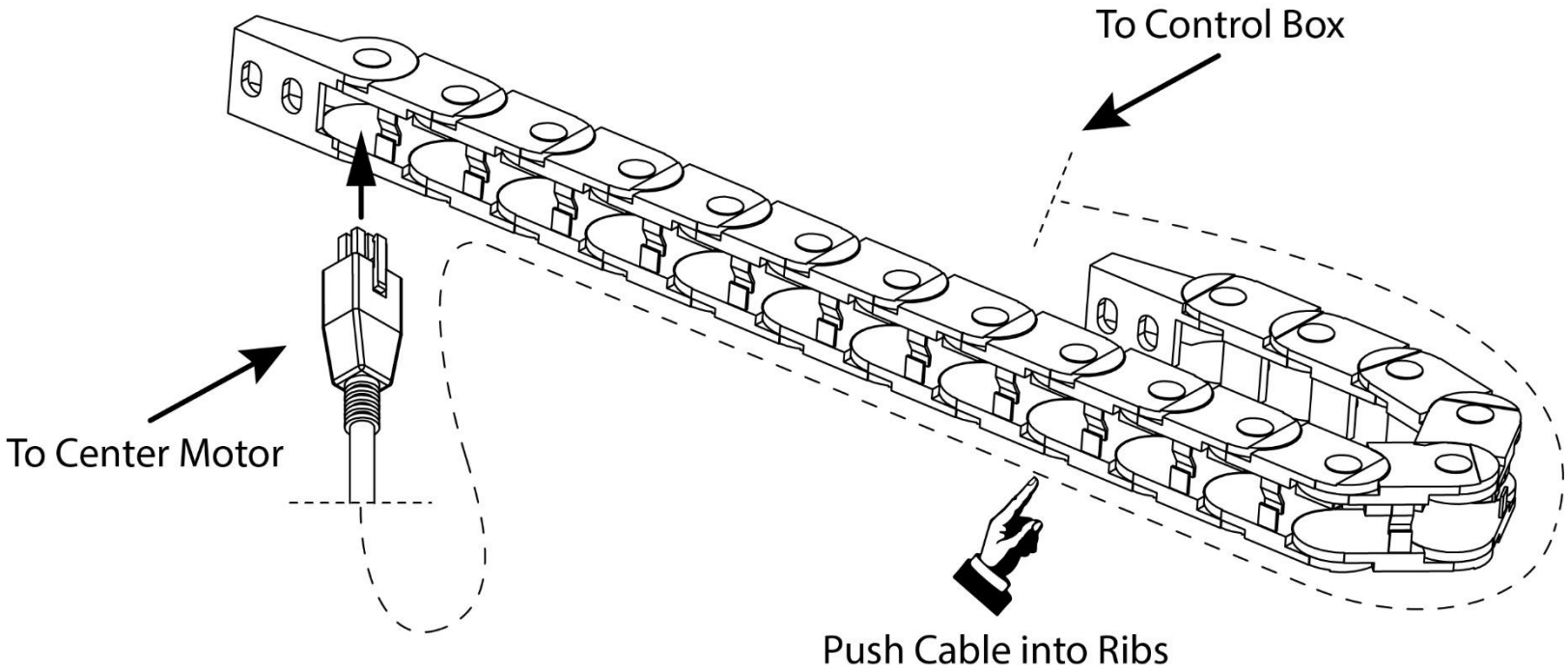

20a. Disconnect the center *Motor Cable* from the *Pigtail*.

20b. Feed the end of the *Motor Cable* through the Rib shown in the image above.

20c. Push the rest of the *Motor Cable* into the remaining Ribs of the *Lower Cable Track*.

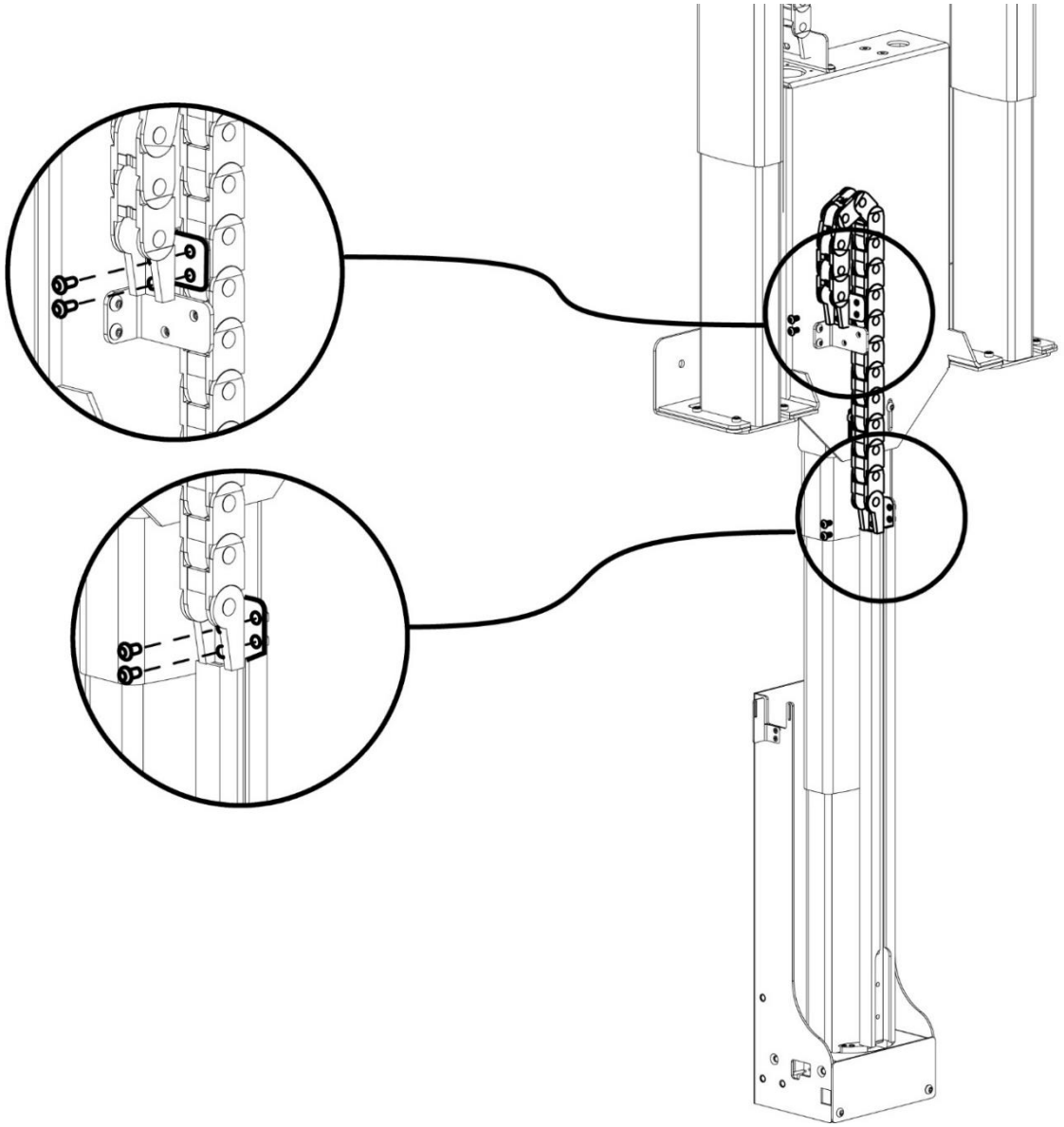

21a. Orient the *Lower Cable Track* to be as shown in the image above.

21b. Fasten the *Lower Cable Track* to the *Center Cable Track Bracket* and *Center Cable Channel* using *(4) 5 x 10 BHMS Screws.*

21c. Push the rest of the *Motor Cable* into the remaining *Ribs* of the *Lower Cable Track.*

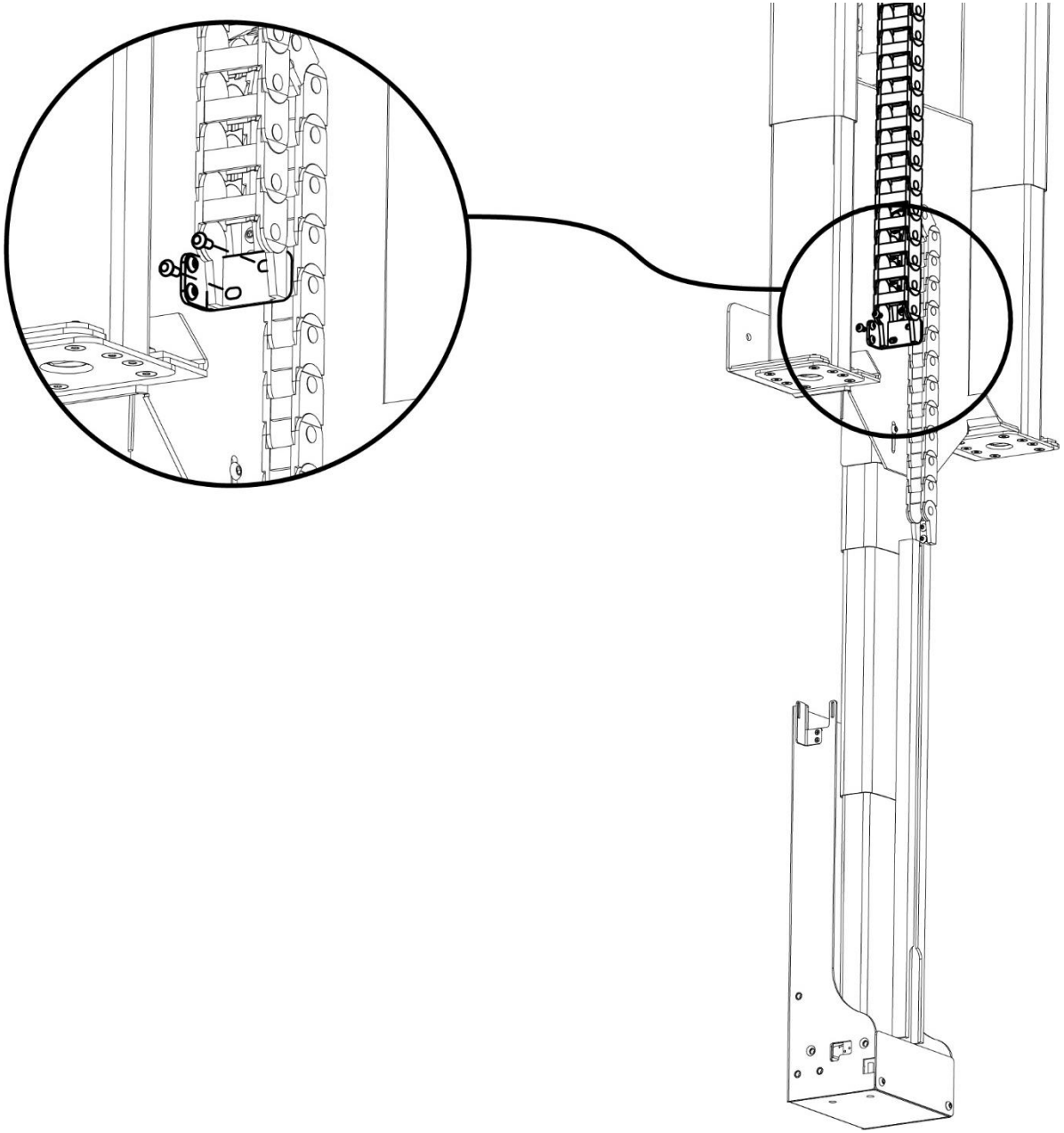

22. Fasten the longer *Upper Cable Track* to the other *Center Cable Track Bracket* using *(2) 5 x 10 BHMS Screws.*

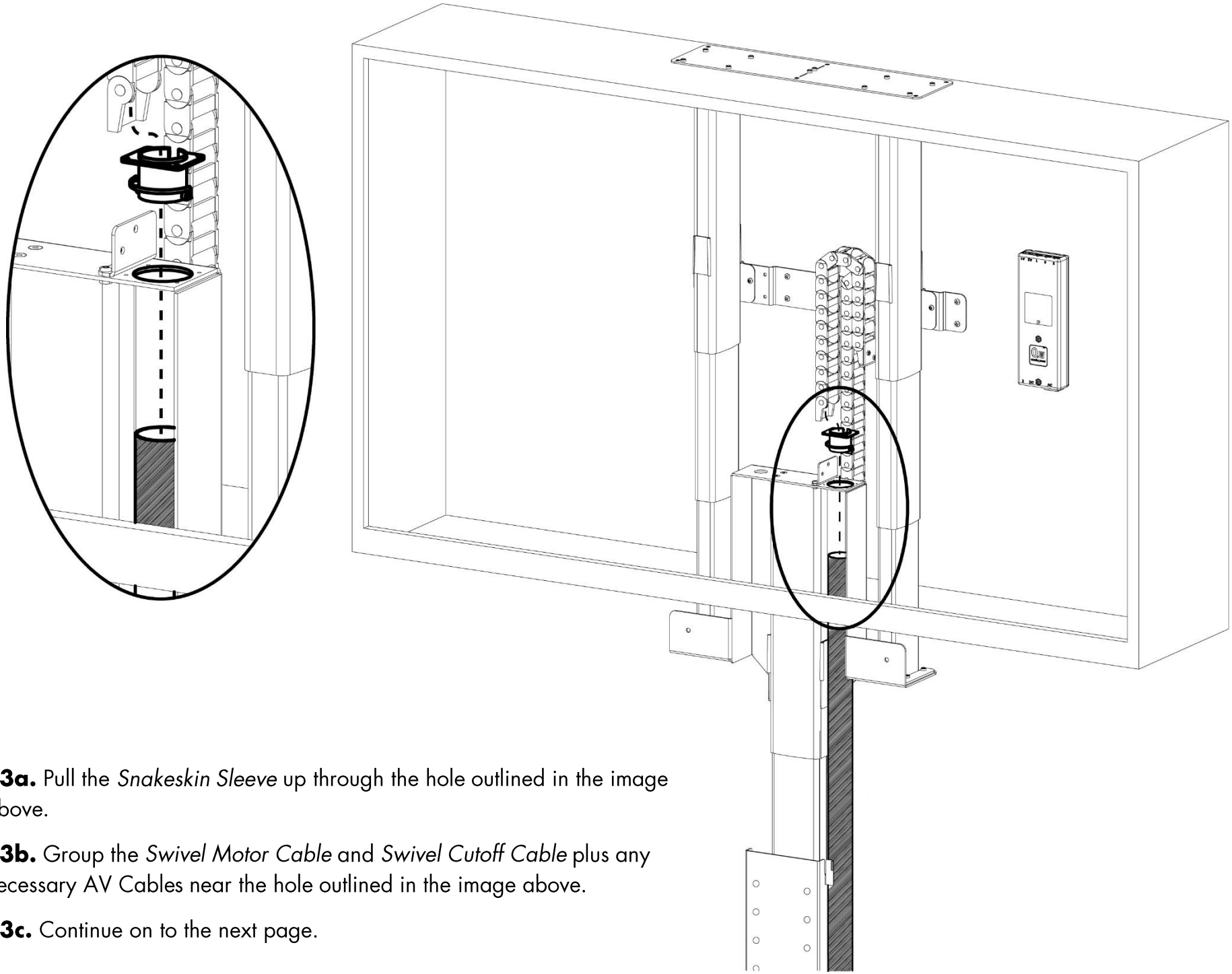

23a. Pull the *Snakeskin Sleeve* up through the hole outlined in the image above.

23b. Group the *Swivel Motor Cable* and *Swivel Cutoff Cable* plus any necessary AV Cables near the hole outlined in the image above.

23c. Continue on to the next page.

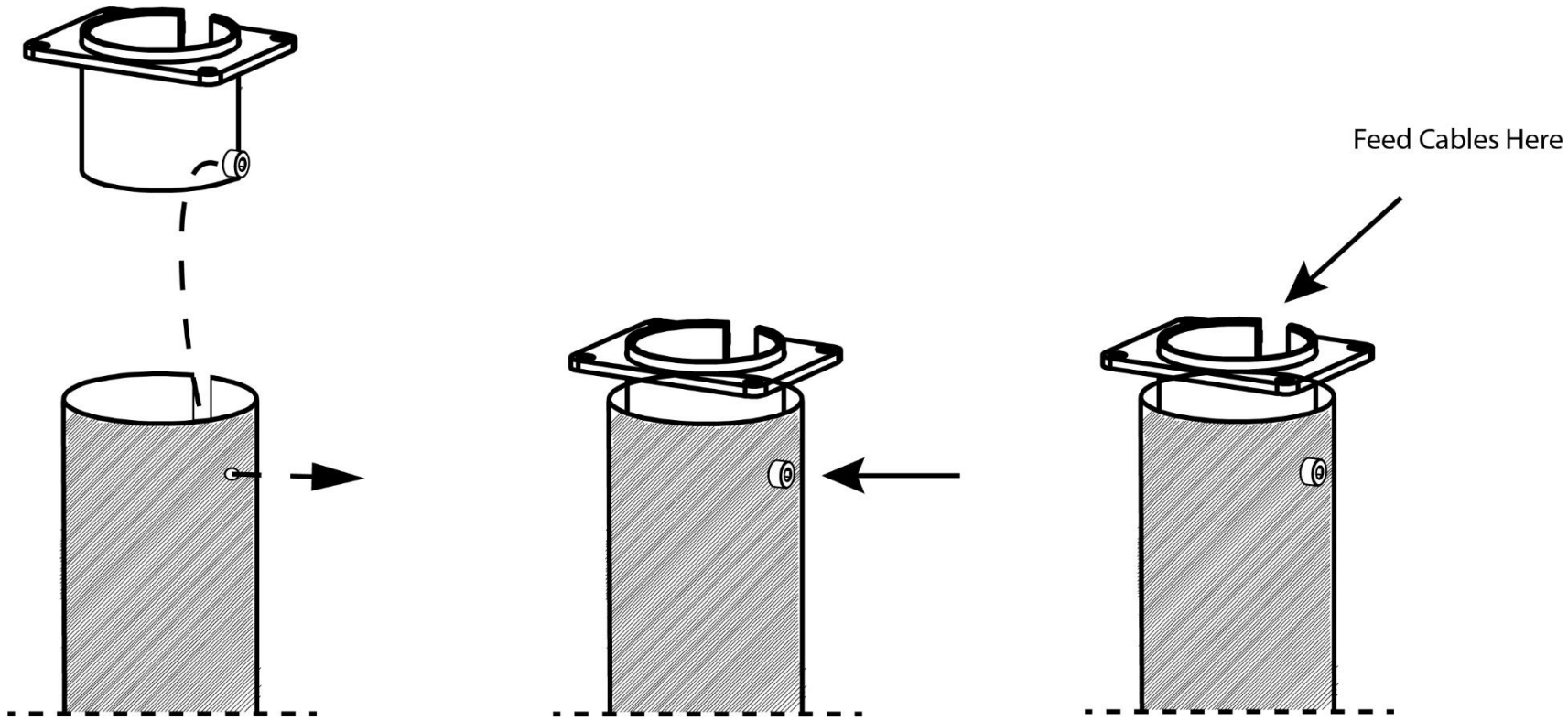

24a. Align the slit in the *Snakeskin Sleeve* with the slit in the *Cable Sleeve Pipe*.

24b. Place the screw heads protruding from the *Cable Sleeve Pipe* through the holes on the *Snakeskin Sleeve*.

24c. Pass the *Swivel Motor Cable* and *Swivel Cutoff Cable* plus any necessary AV Cables through the slit on the *Cable Sleeve Pipe*.

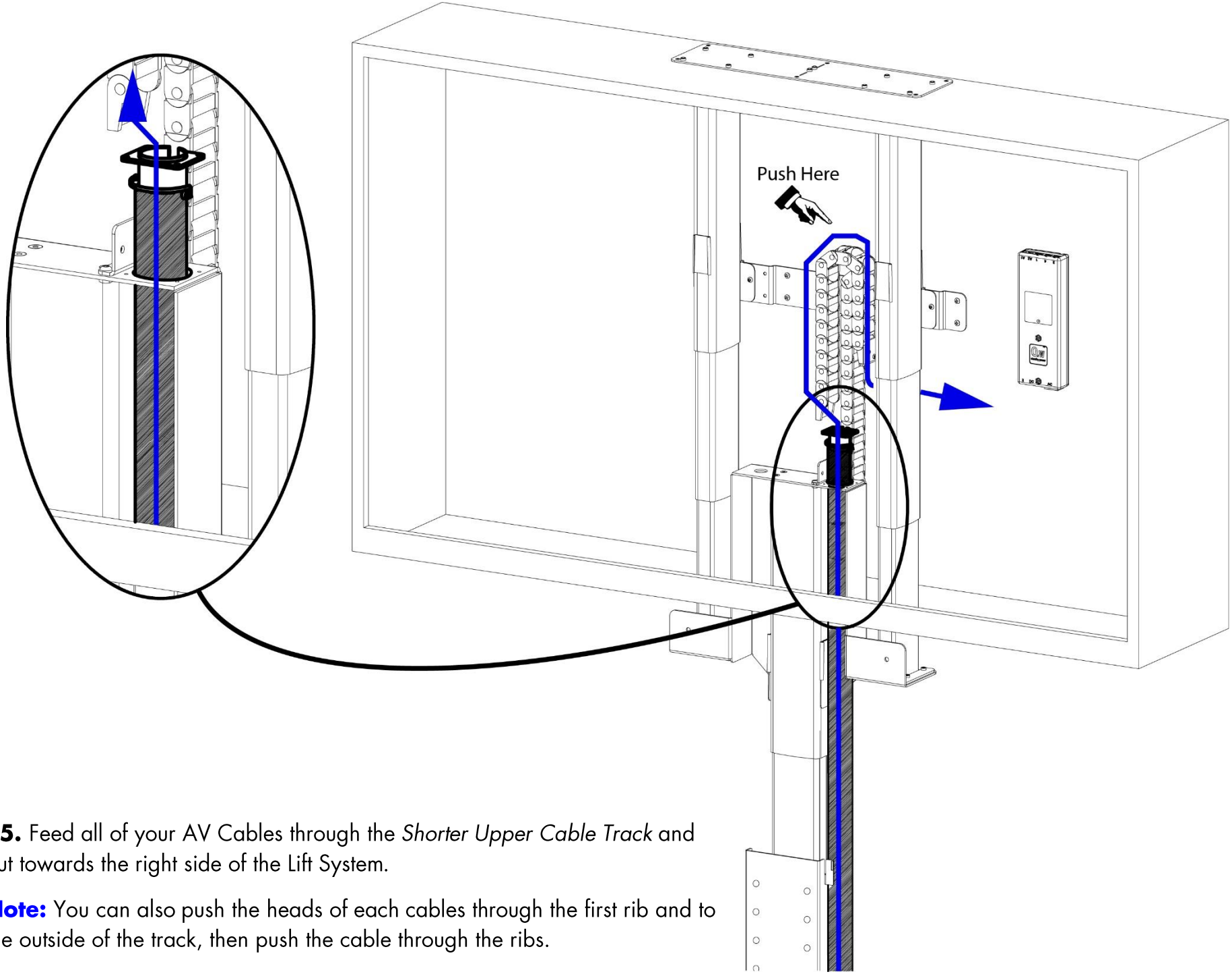

25. Feed all of your AV Cables through the *Shorter Upper Cable Track* and out towards the right side of the Lift System.

Note: You can also push the heads of each cables through the first rib and to the outside of the track, then push the cable through the ribs.

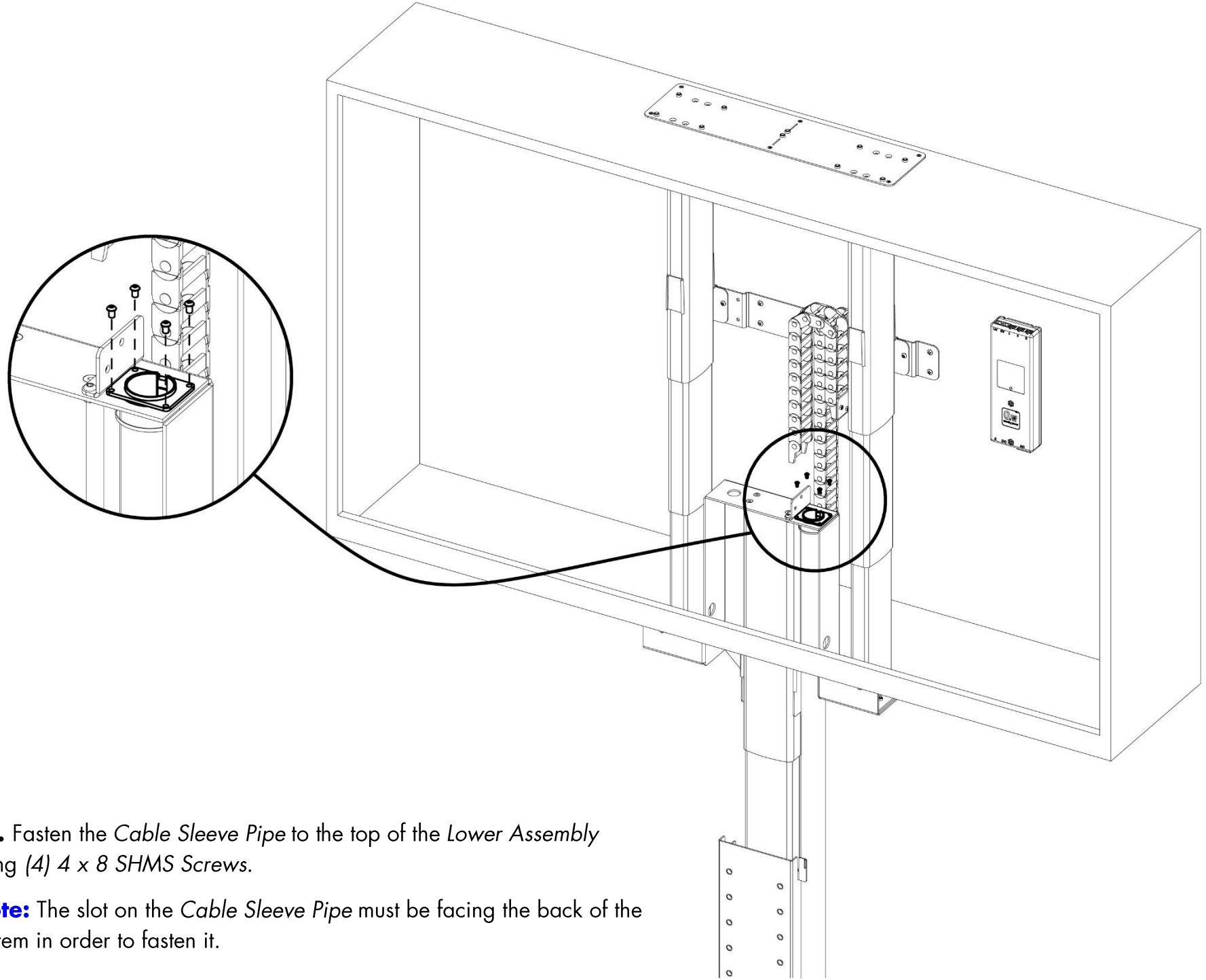

26. Fasten the *Cable Sleeve Pipe* to the top of the *Lower Assembly* using *(4) 4 x 8 SHMS Screws*.

Note: The slot on the *Cable Sleeve Pipe* must be facing the back of the system in order to fasten it.

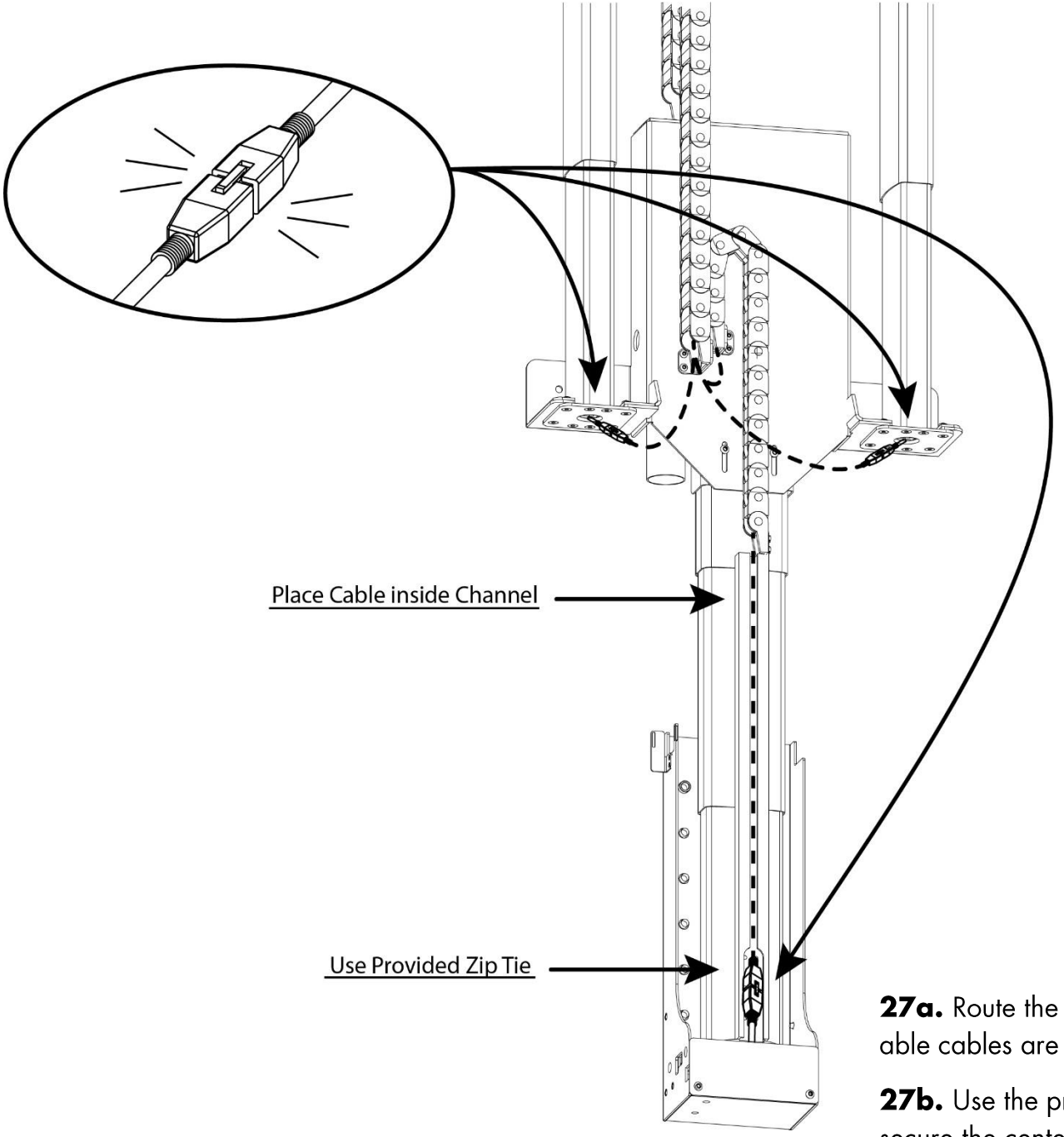

27a. Route the cables similar to the image above, ensure able cables are connected after you're done.

27b. Use the provided *Zip Tie* in the *Cable Channel* to secure the center *Motor Cable*.

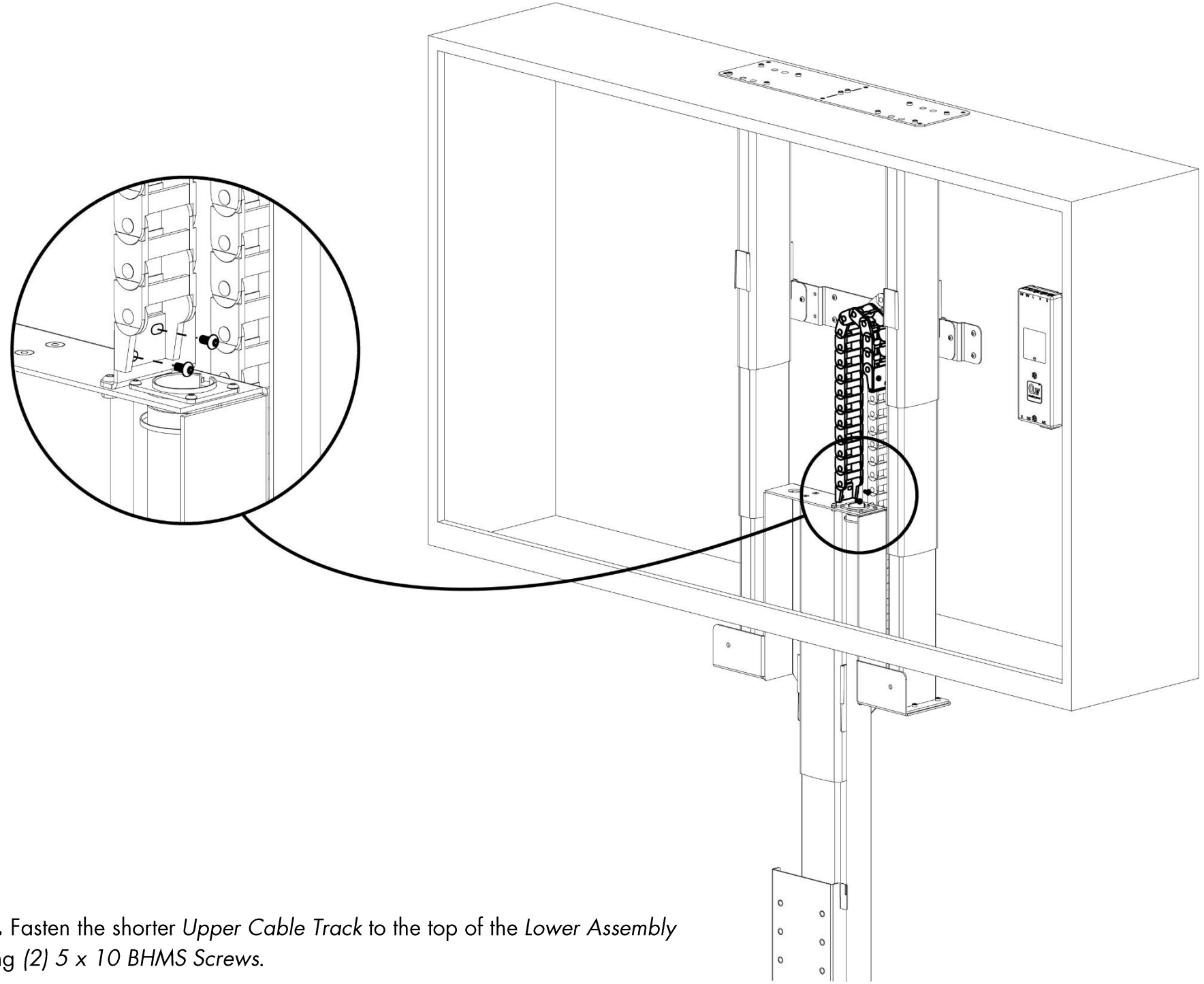

28. Fasten the shorter *Upper Cable Track* to the top of the *Lower Assembly* using *(2) 5 x 10 BHMS Screws.*

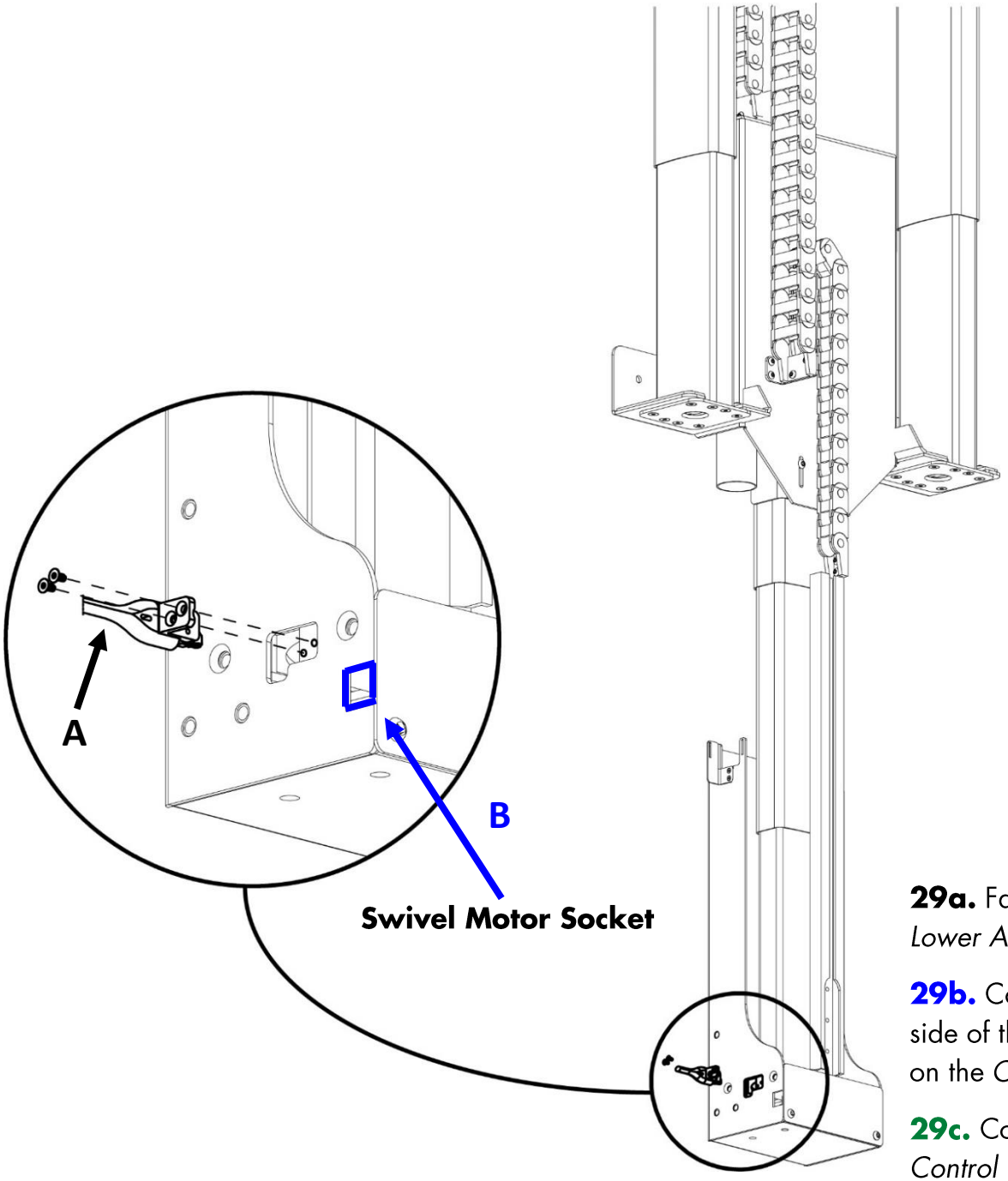

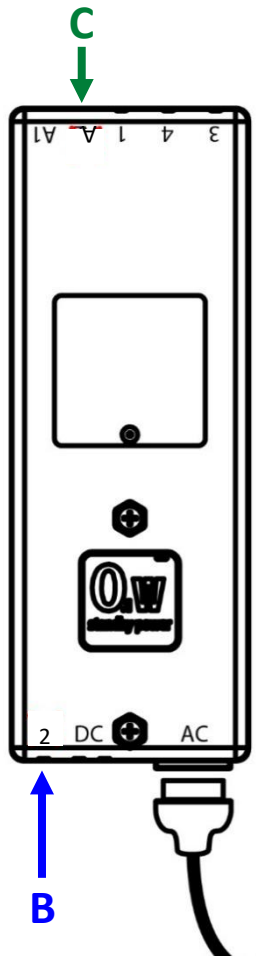

29a. Fasten the *Swivel Cutoff Switch* to the side of the *Lower Assembly* using *(2) 3 x 10 FHMS Screws.*

29b. Connect one end of the *Swivel Motor Cable* to the side of the *Lower Assembly* and the other end to *Port 2* on the *Control Box.*

29c. Connect the *Swivel Cutoff Cable* to *Port A2* on the *Control Box.*

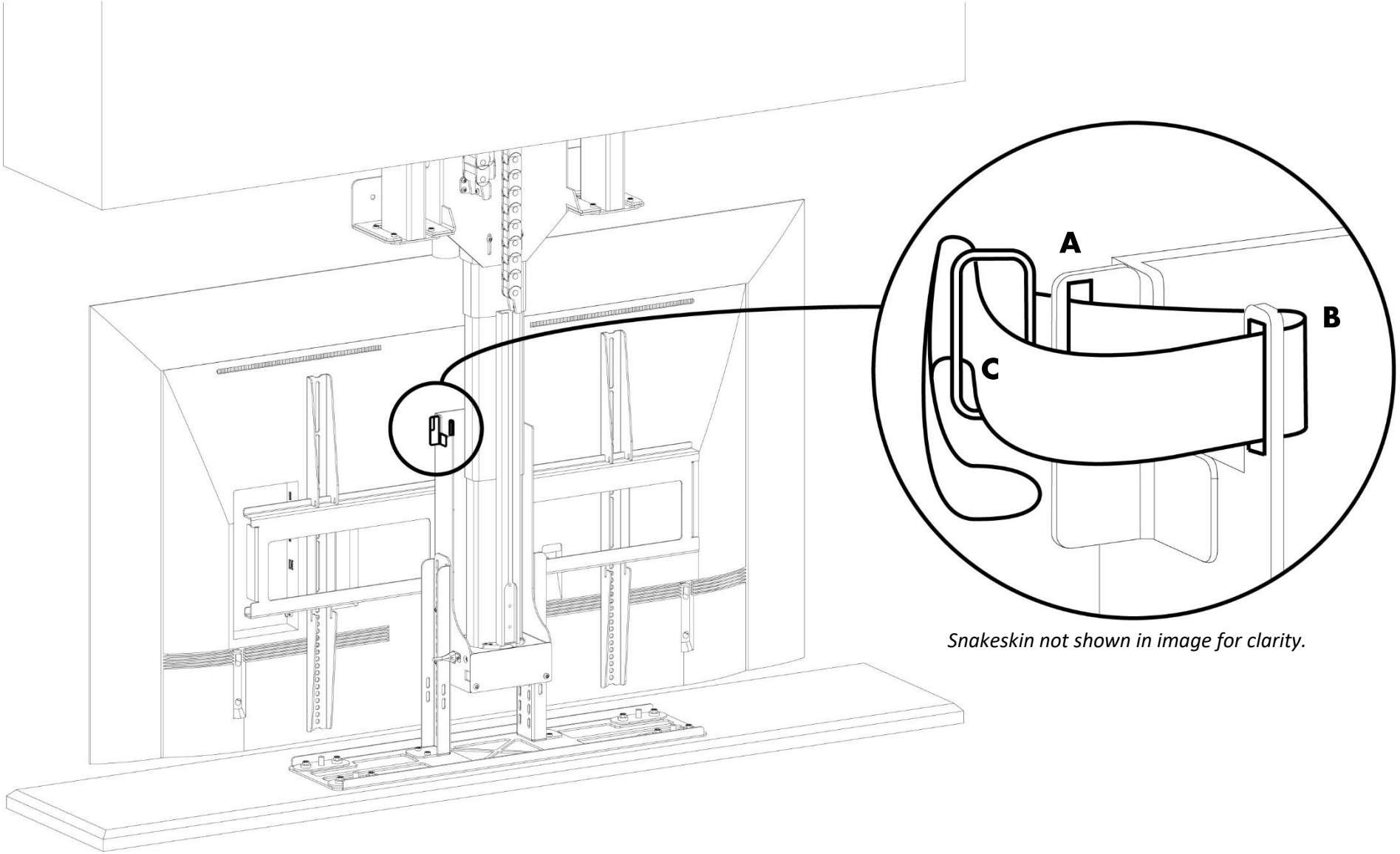

Snakeskin not shown in image for clarity.

30a. Pull the tapered end of the *Velcro Strap* through the left slot until the buckle pulls against the slot.

30b. Pull the tapered end of the *Velcro Strap* though the right slot, leaving a slight amount of slack.

30c. Pass the tapered end of the *Velcro Strap* through the Buckle and cinch it.

Note: Ensure the *Velcro Strap* is not too tight as it may cause the *Snakeskin* to get hung up during retraction.

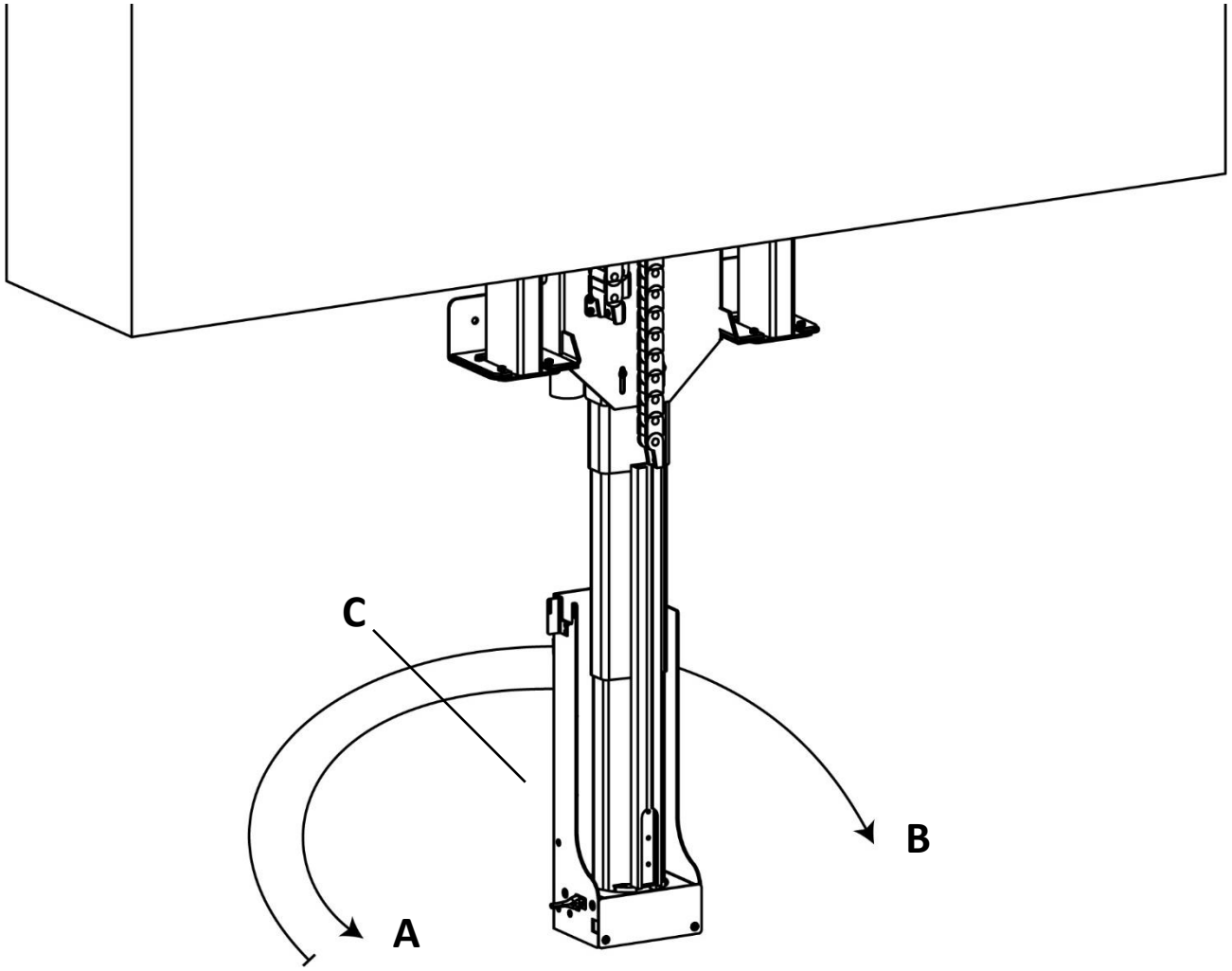

31a. Use the "Right" button on the remote to rotate the *Lower Assembly* to the right, 45 degrees.

31b. Use the "Left" button on the remote to rotate the *Lower Assembly* past center, and left 45 degrees.

31c. Press the "Right" button to rotate the *Lower Assembly* towards center, if the center position has been learned it will stop.

Note: If your system continues to rotate and does not stop at center, make sure the Swivel Cutoff Cable is connected to the Control Box and repeat these steps rotating more than 45 degrees.

TV Mounting

Parts List:

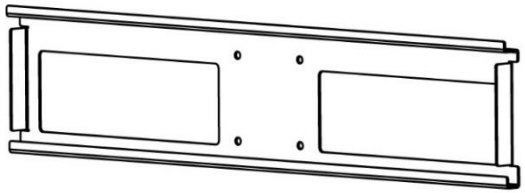

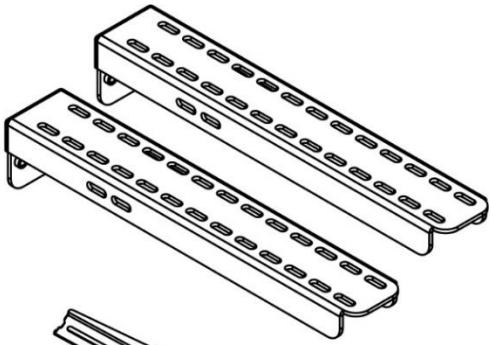

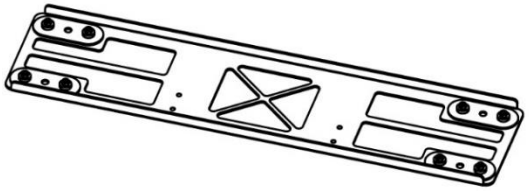

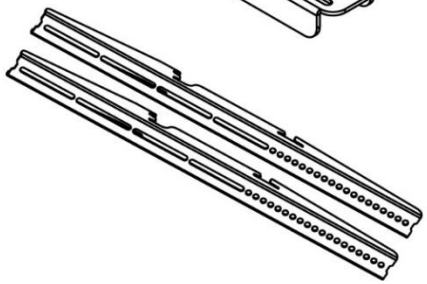

Required Hardware:

- (1) Screen Back Plate
- (2) Top Support Brackets
- (1) Lid Plate
- (2) Vertical Mounting Bars
- (2) Screen Locks

- TV Mounting Hardware
    - (4) – BHMS 3/8"-16 x 3/4"
    - (6) – BHMS M6 X 10mm
    - (4) – FHMS M6 x 12mm
    - (1) – Large Assorted Hardware Pack

32. Fasten the *Screen Back Plate* to the *Lower Assembly* using *(4) 3/8" – 16 x ¾" BHMS Screws.*

Note: The *Screen Back Plate* position can be adjusted up or down, in 2" increments, along the *Lower Assembly* to change the TV position.

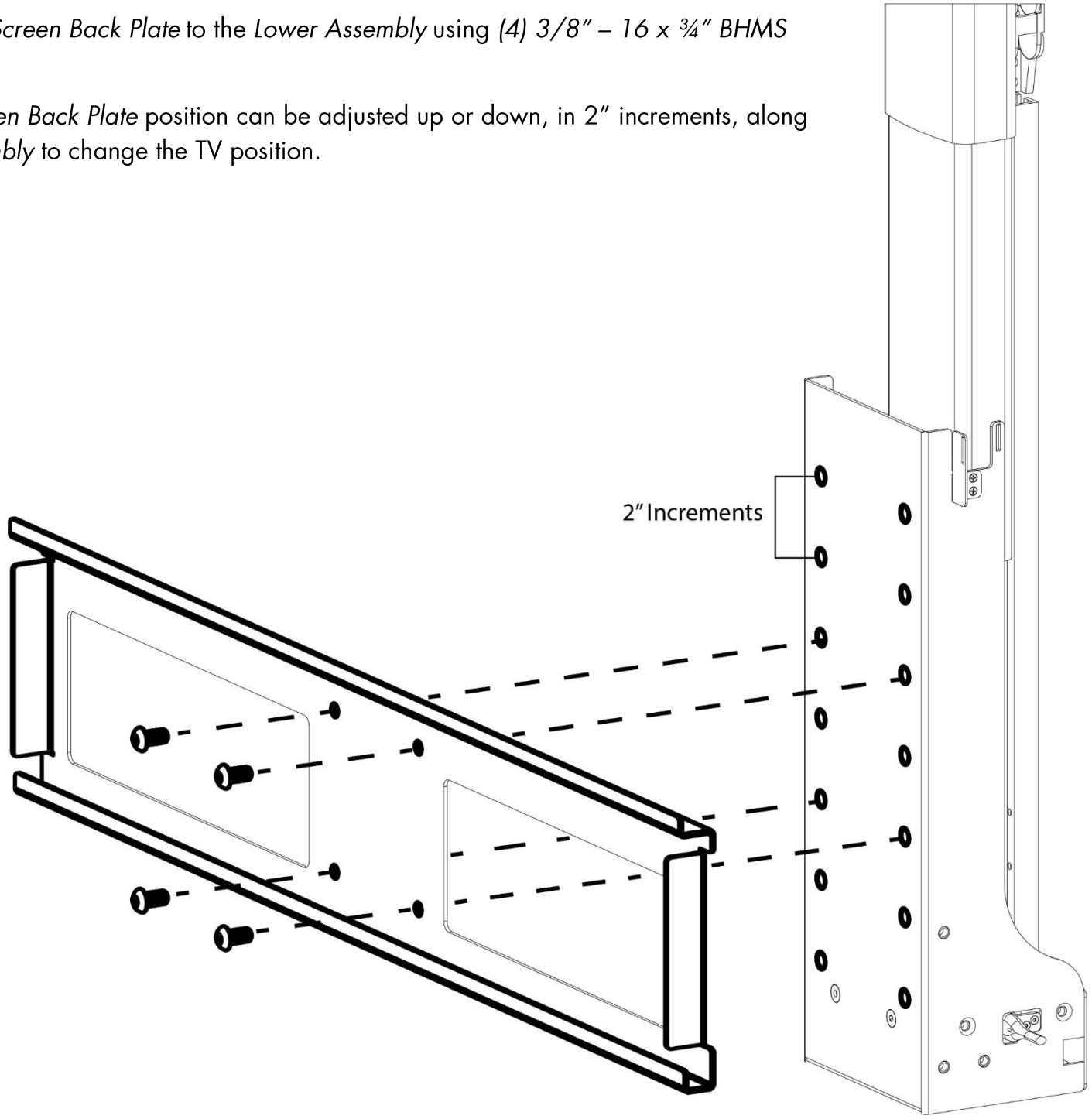

33. Fasten the *Top Support Brackets* to the left and right sides of the *Lower Assembly* using *(6) 6 x 10 BHMS Screws*. (4) Screws can be used for lower *Lid Plate* positions.

Note: The *Top Support Brackets* position can be adjusted up or down, along the *Lower Assembly* to change the *Lid Plate* position.

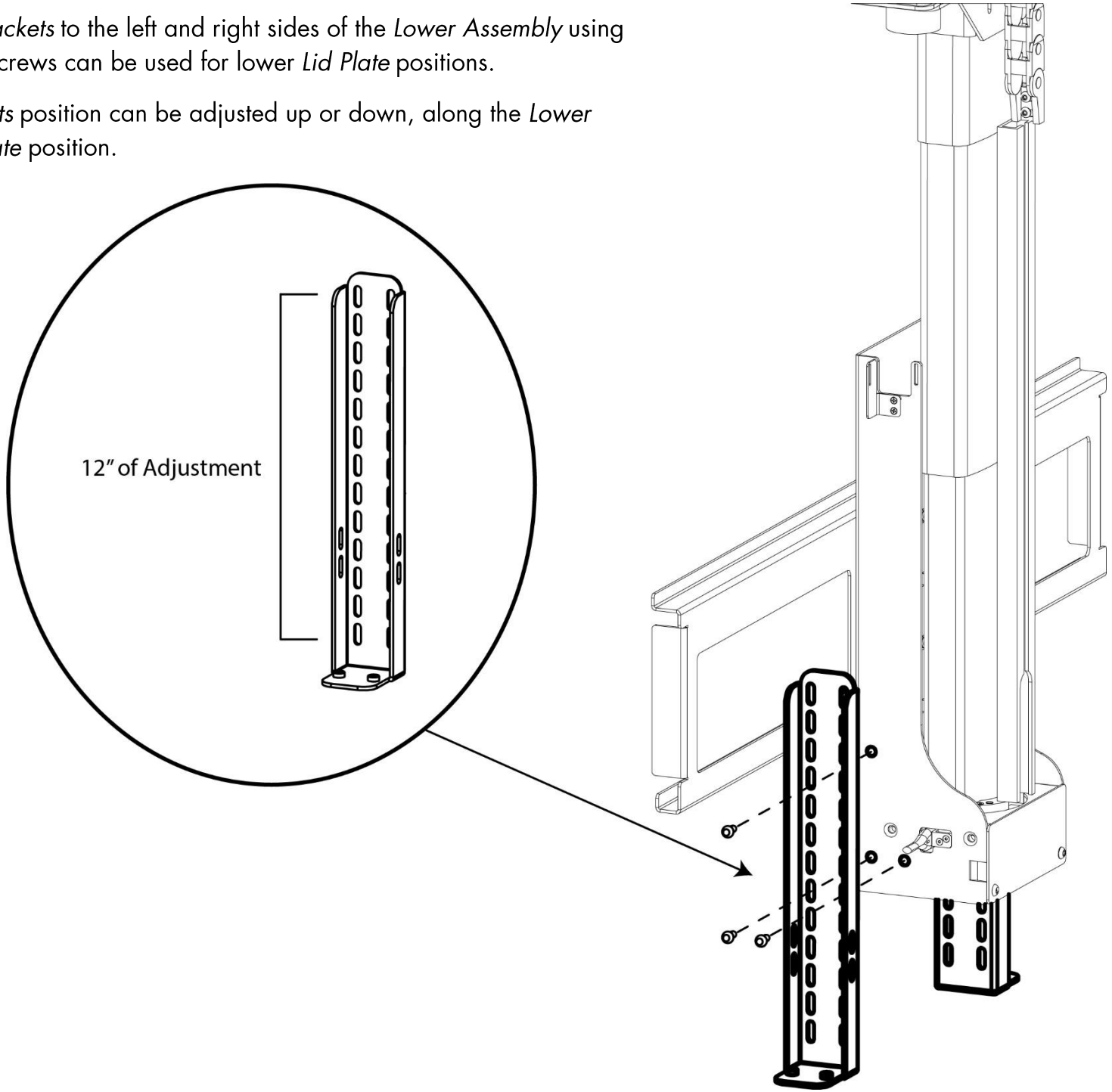

34. Fasten the *Lid Plate* to the bottoms of the *Top Support Brackets* using *(4) 6 x 12 FHMS Screws.*

Note: The edge of the *Lid Plate* closest to the countersunk holes is the Front.

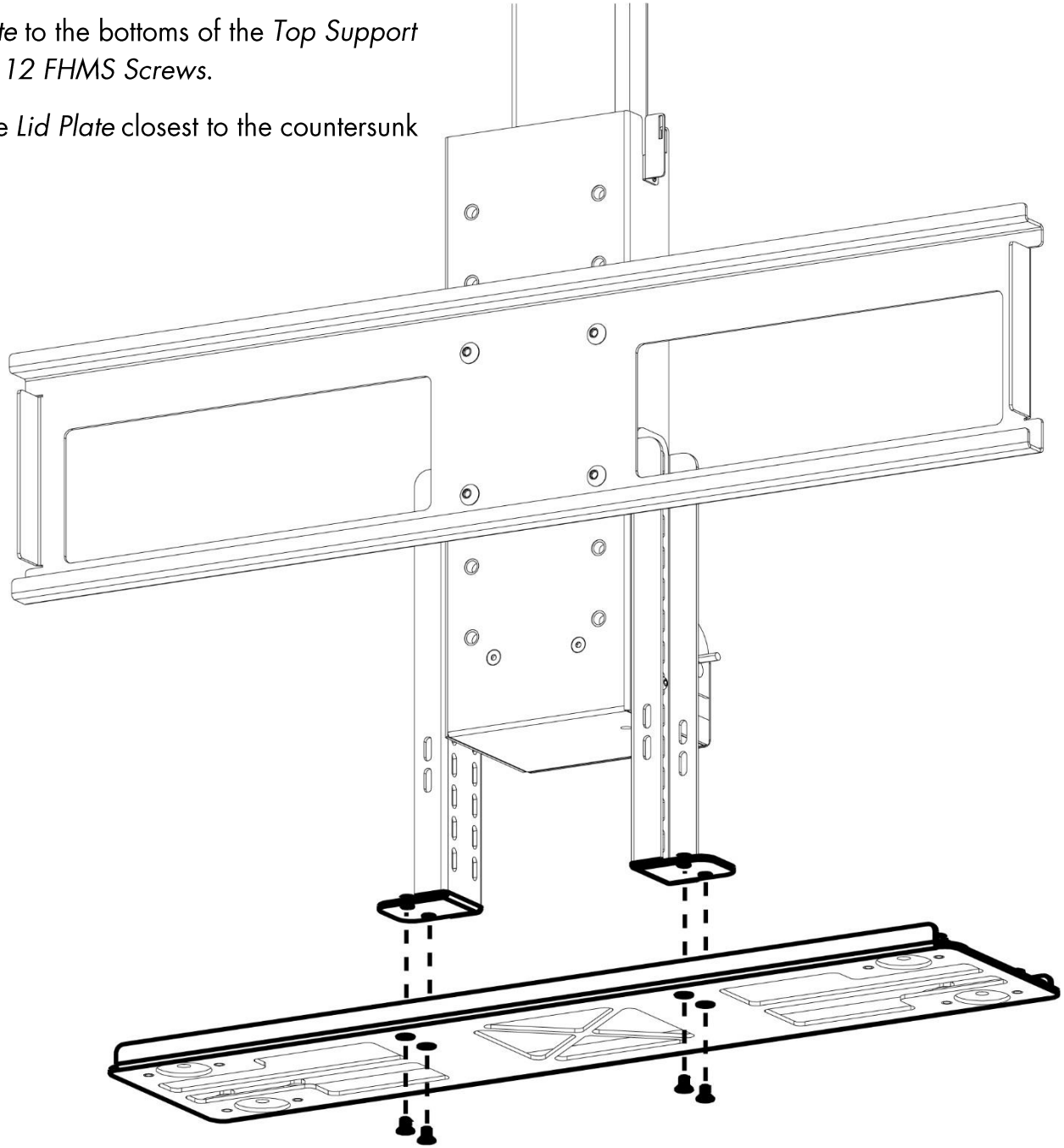

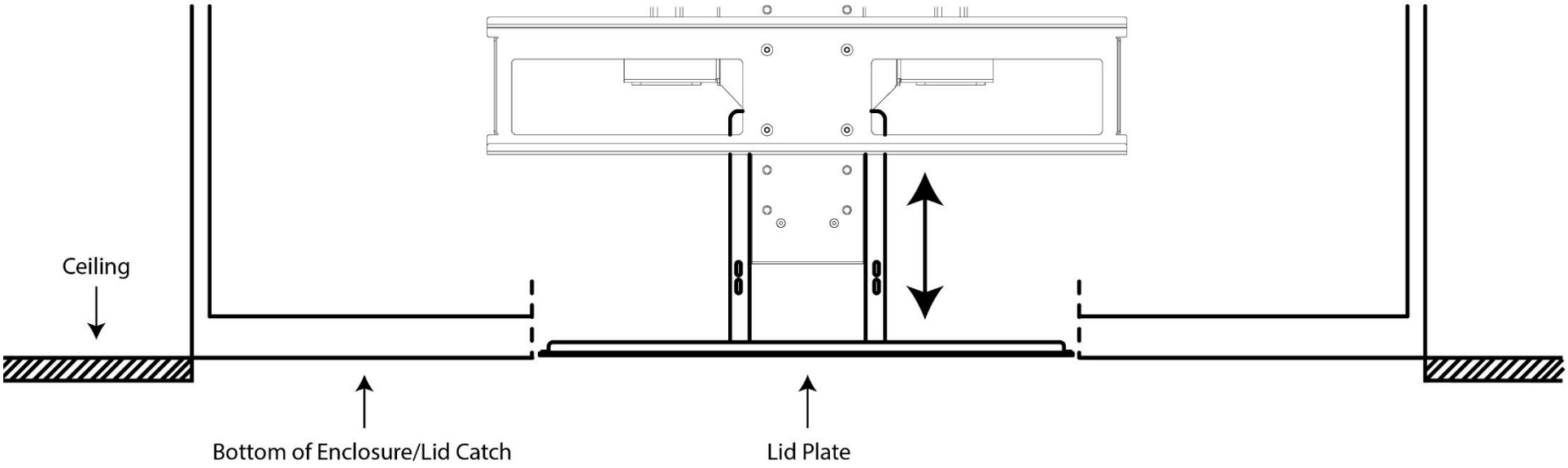

35. Adjust the *Top Support Brackets* until the bottom face of the *Lid Plate* is flush with the bottom of your enclosure or Lid Catch.

Note: This step is necessary to ensure you can mark the location of the *Lid Stabilization Kit* in a later section of the manual and acts as the lower boundary for locating the correct position of your TV.

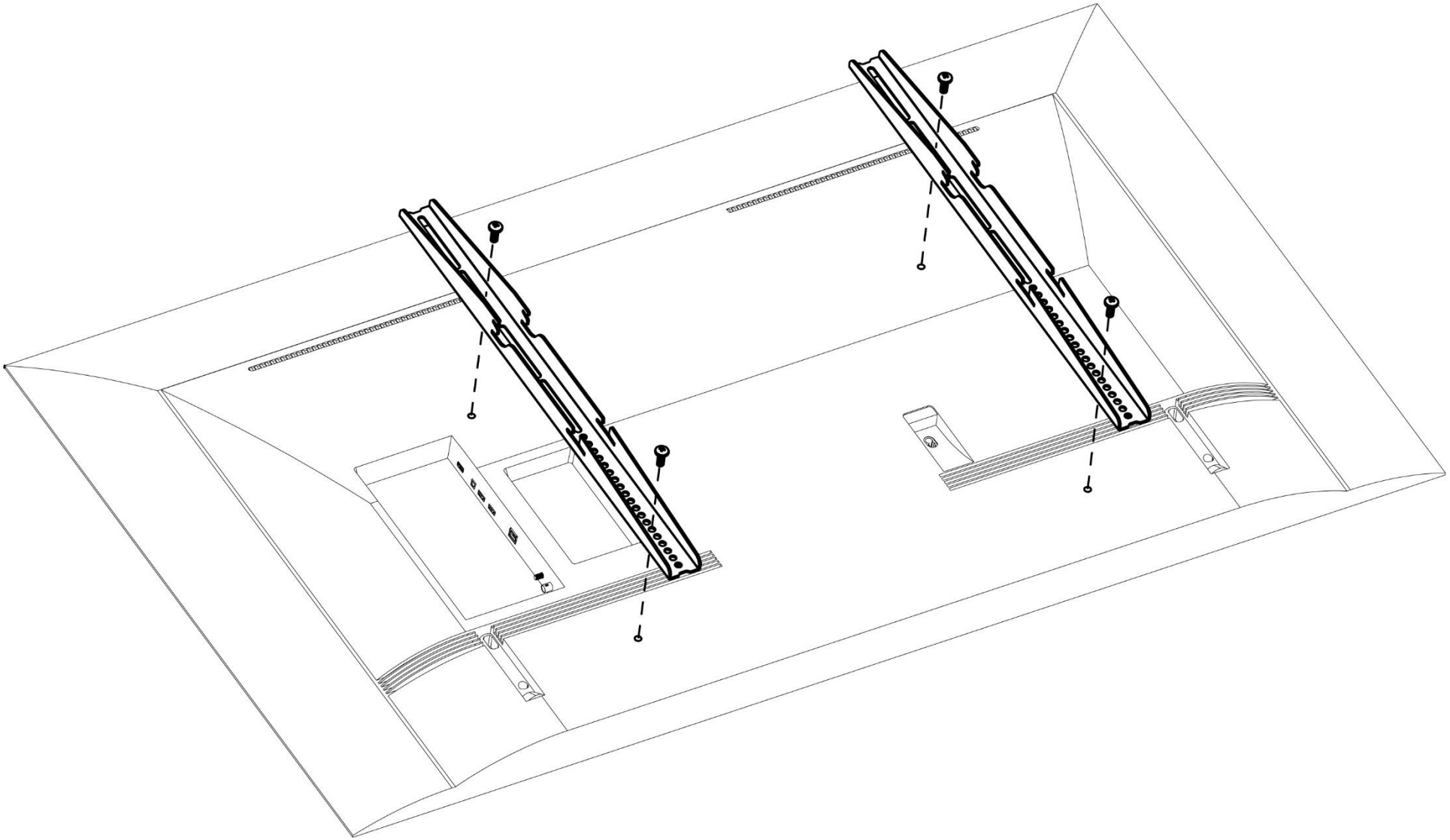

36. Attach the *Vertical Mounting Bars* to the Mounting Holes on the back of your TV using the *Large Assorted Hardware Pack*.

Note: The *Vertical Mounting Bars* can be adjusted up or down along the back side of your TV. Use this adjustment to reduce the gap between the *Lid Plate* and the bottom of your TV. Be sure the slotted holes are oriented towards the top of your TV.

37. Hang your TV on the *Screen Back Plate*, center it, then use the *Screen Locks* to lock it into place.

Note: If you are not satisfied with the position of the TV, adjust the position of the Vertical Bars up to lower the TV's position and down to raise the TV's position.

Important Note: Ensure the gap between the bottom of your TV and the Lid Plate is as small as possible. This is for the protection of your TV and aesthetics.

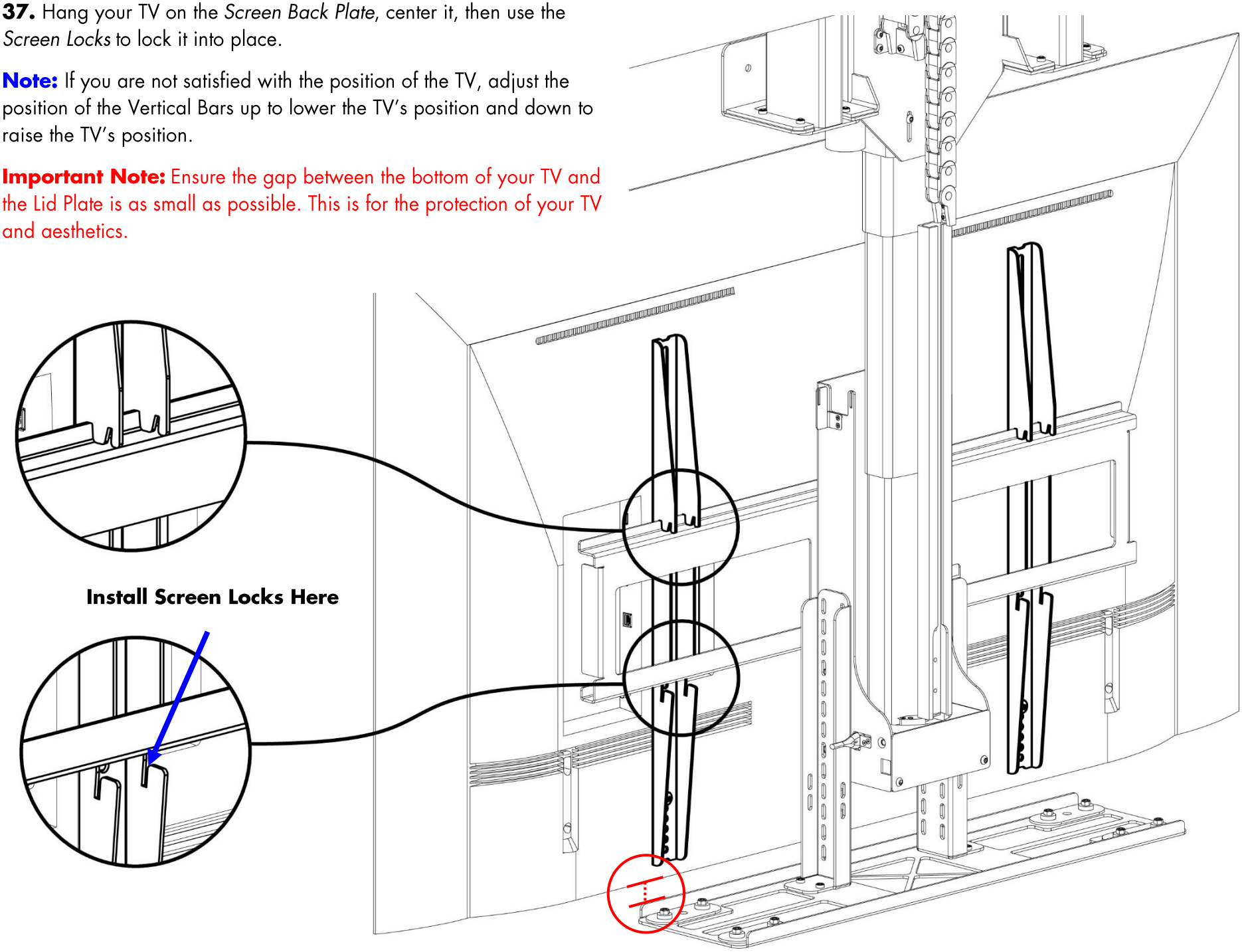

Lid Installation

Parts List:

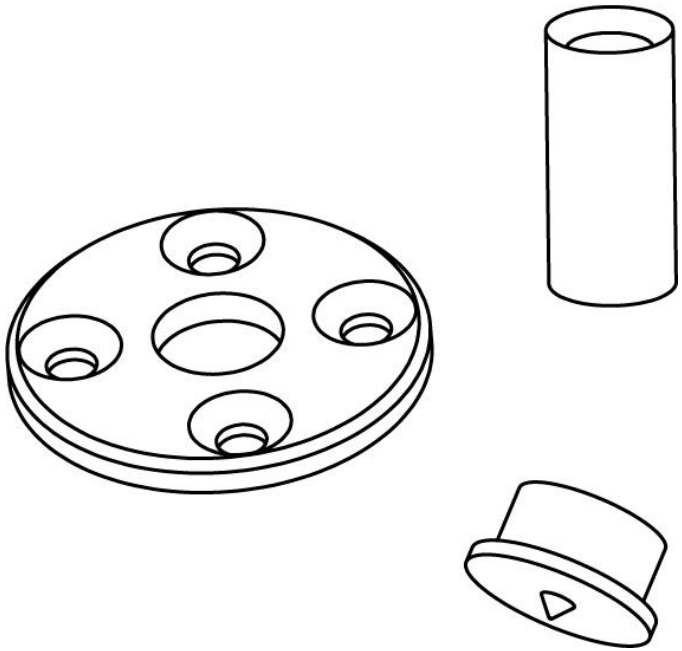

Required Parts & Hardware:

- Lid Installation Hardware
  - (16) – #6 x 1/2" FHWS Screws
  - (4) – SHMS 5/16"-18 X 1-1/2
  - (4) – SHMS 5/16"-18 X 3/8"
  - (4) – 2.5 LG Spring
  - (4) – Lid Mounting Disc
  - (4) – Stabilization Mount
  - (4) – Dowel Centers

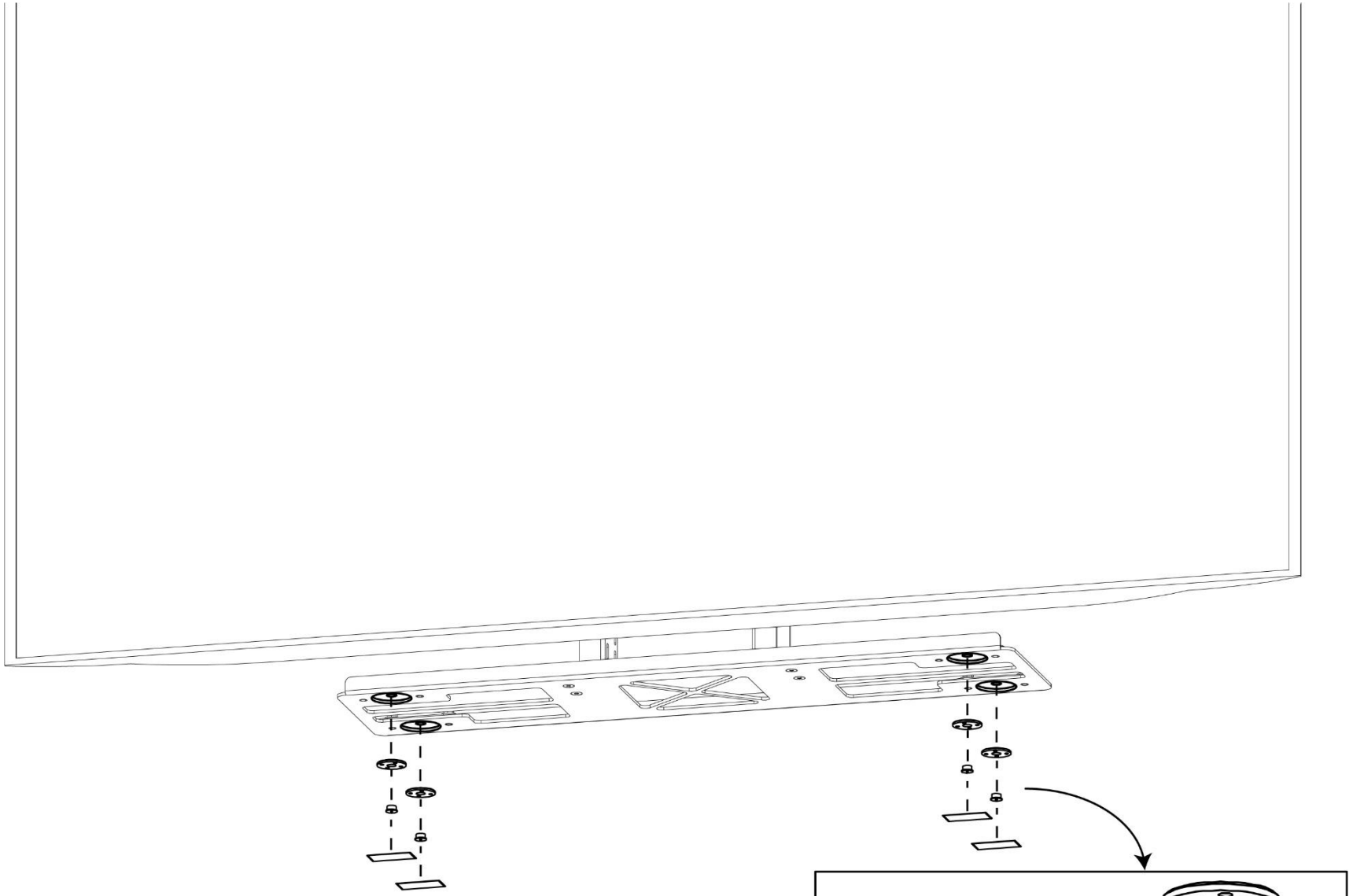

38a. Place the *Lid Mount Disc's* into the *Floating Nests* on the *Lid Plate* and center them within in the nest.

38b. Place a *Dowel Center* into the center hole of each *Lid Mount Disc's*.

38c. Tape the *Lid Mount Disc's* and *Dowel Center* in place on the *Lid Plate*.

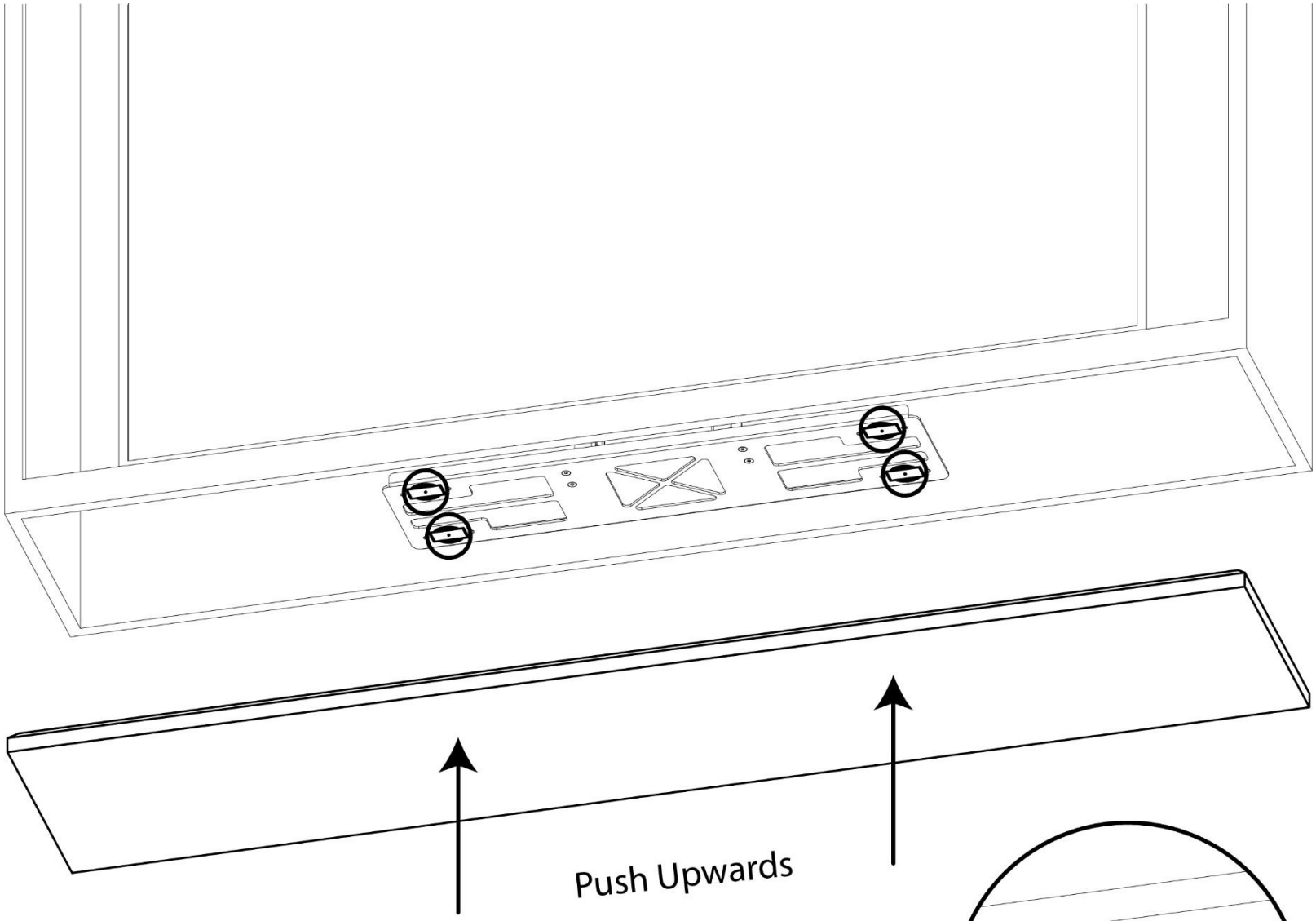

39. Grab your lid, center it within the opening, and push it up against the *Dowel Center Tips* to mark the locations for holes.

Note: If no mark is made you may need to lower your *Lid Plate* to allow the Lid to press against the *Dowel Center Tips*.

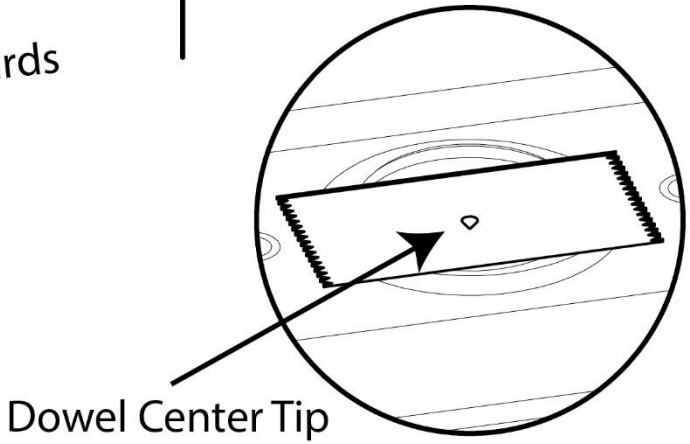

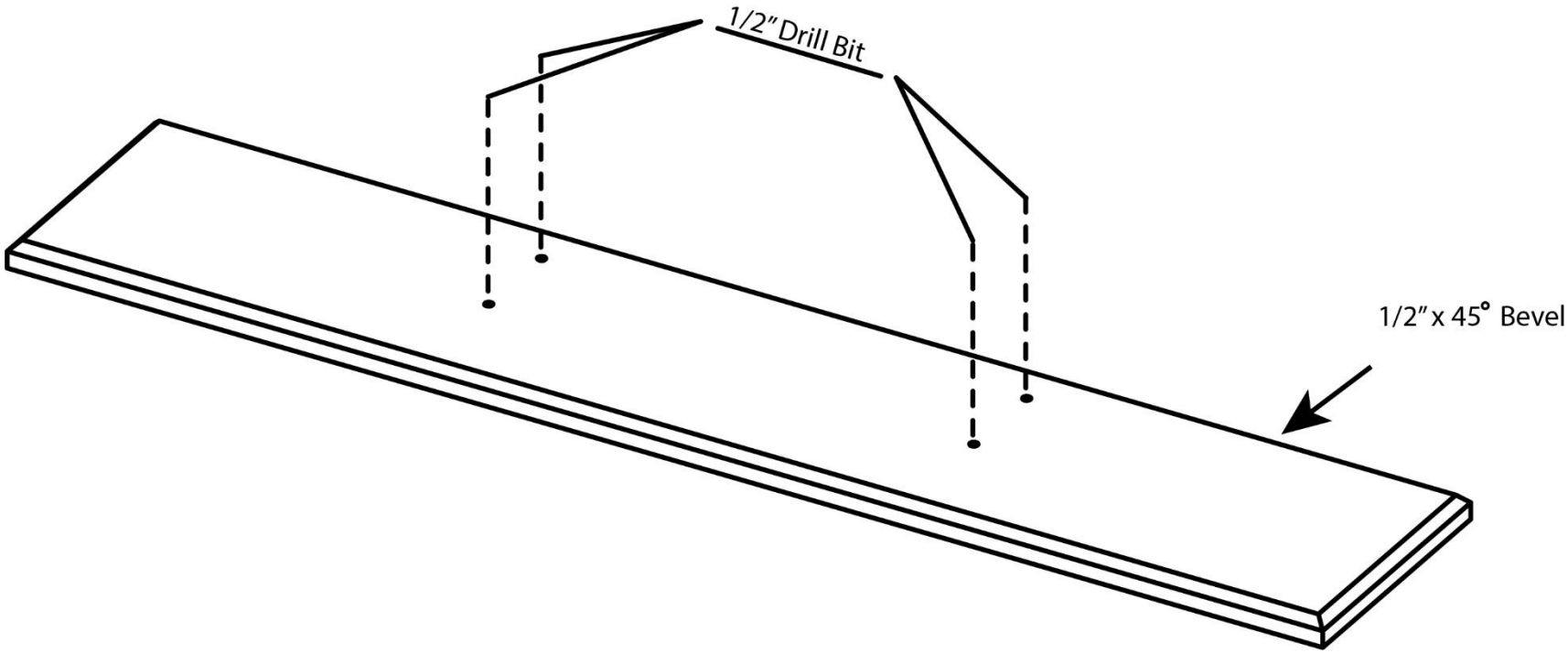

40. Drill a hole in each of the (4) marked locations with a ½" Drill Bit and make sure the Lid has a ½" deep, 45 degree bevel all the way around the edge.

Note: The beveled edge ensures the lid will close perfectly every time.

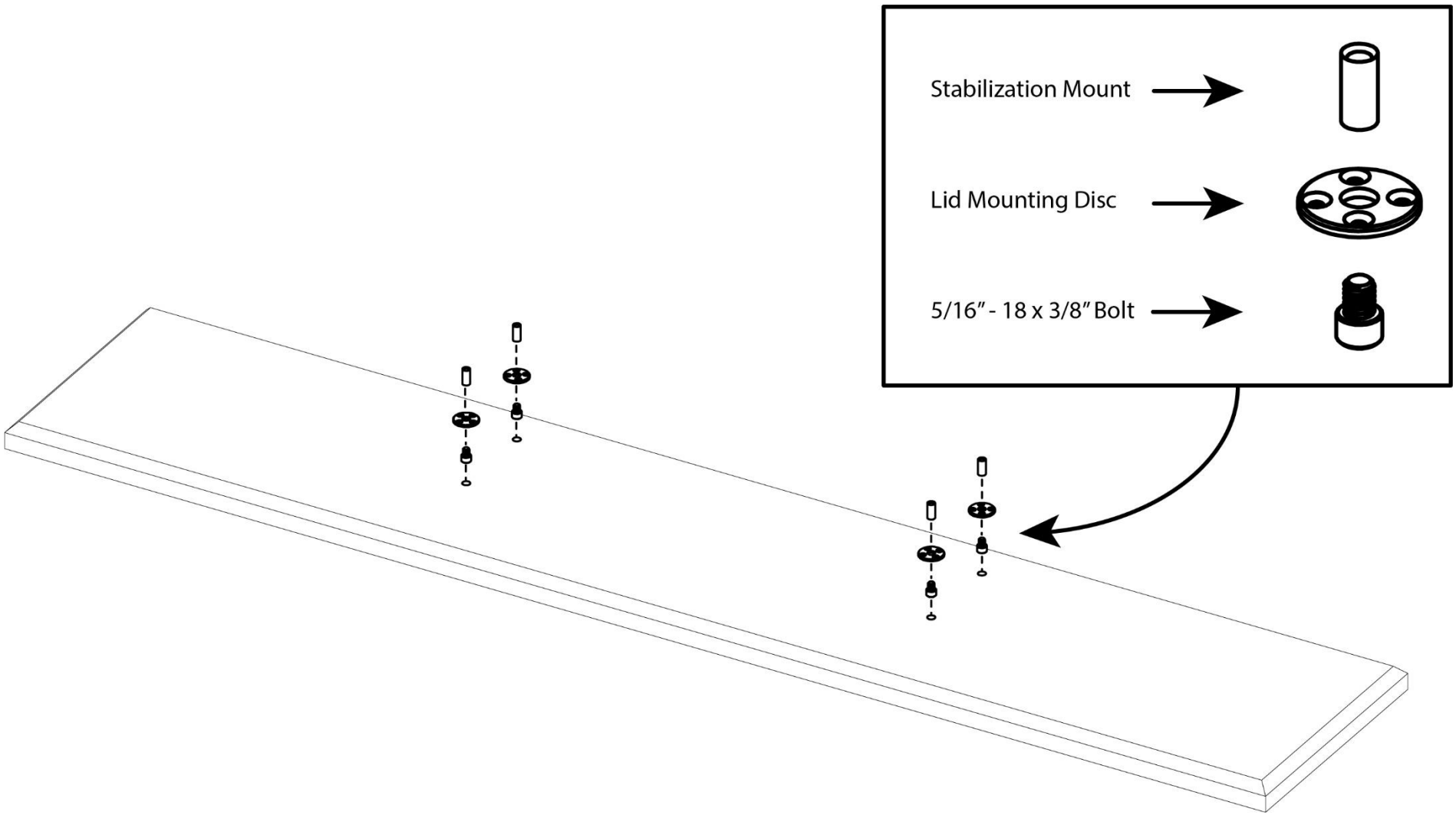

41a. Place a quick setting *Epoxy* into each hole and then place the *SHMS 5/16"-18 X 3/8"* Screws into each hole.

41b. Detach the *Lid Mount Discs*, remove the *Dowel Centers*, then place them over each of the *5/16″-18 x 3/8″ Bolts*.

41c. Thread the *Stabilization Mounts* onto each of the *SHMS 5/16"-18 X 3/8" Screws* with the countersunk threads pointed up

Note: A alternate quick setting adhesive can be used in the event that *Epoxy* is not available.

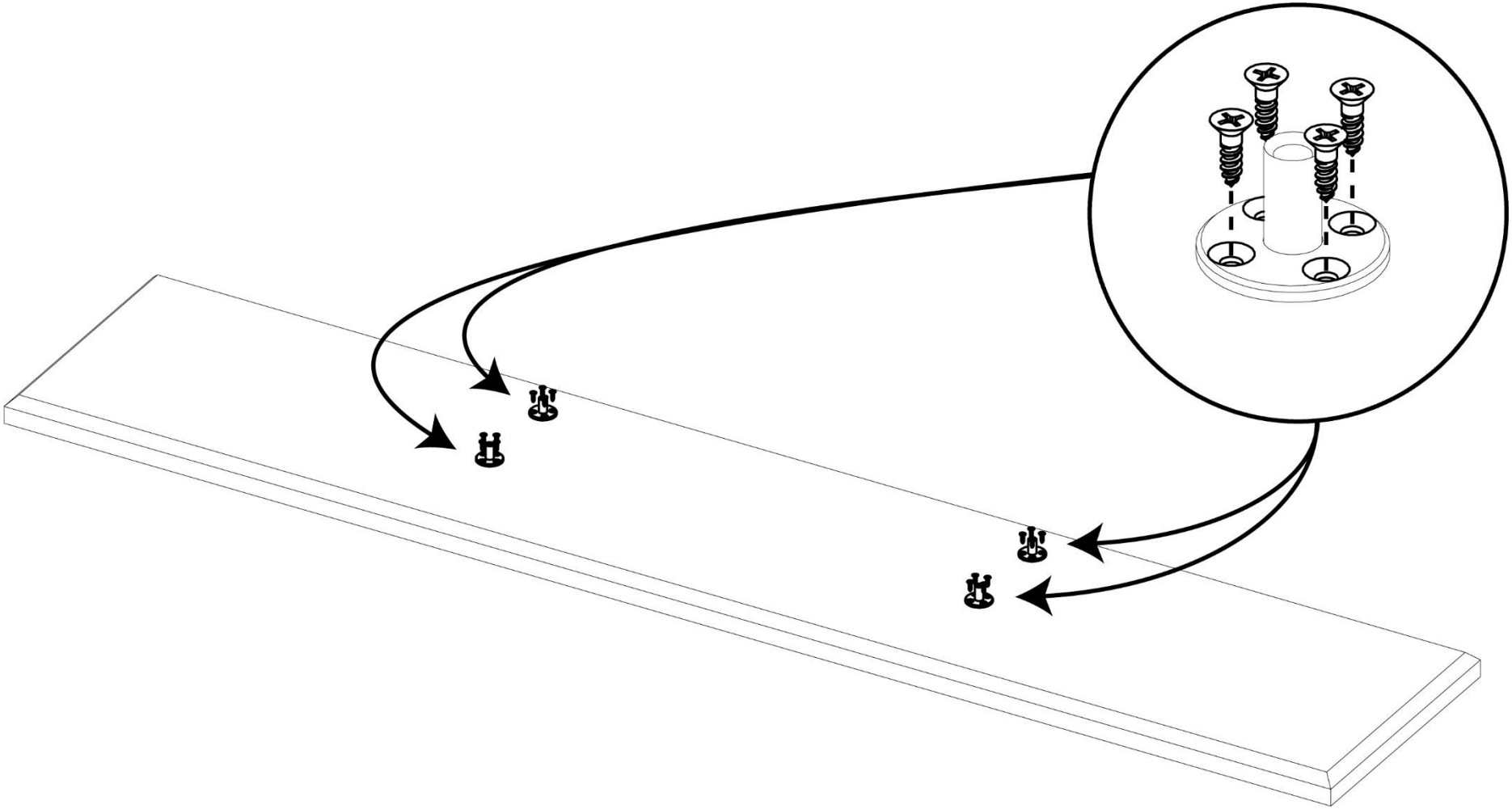

42. Fasten the *Lid Mount Discs* to your Lid using *(16) #6 x ½" FHWS Screws.*

Important Note: Make sure the Stabilization Mounts remain upright as you fasten the Lid Mount Disc's to the Lid.

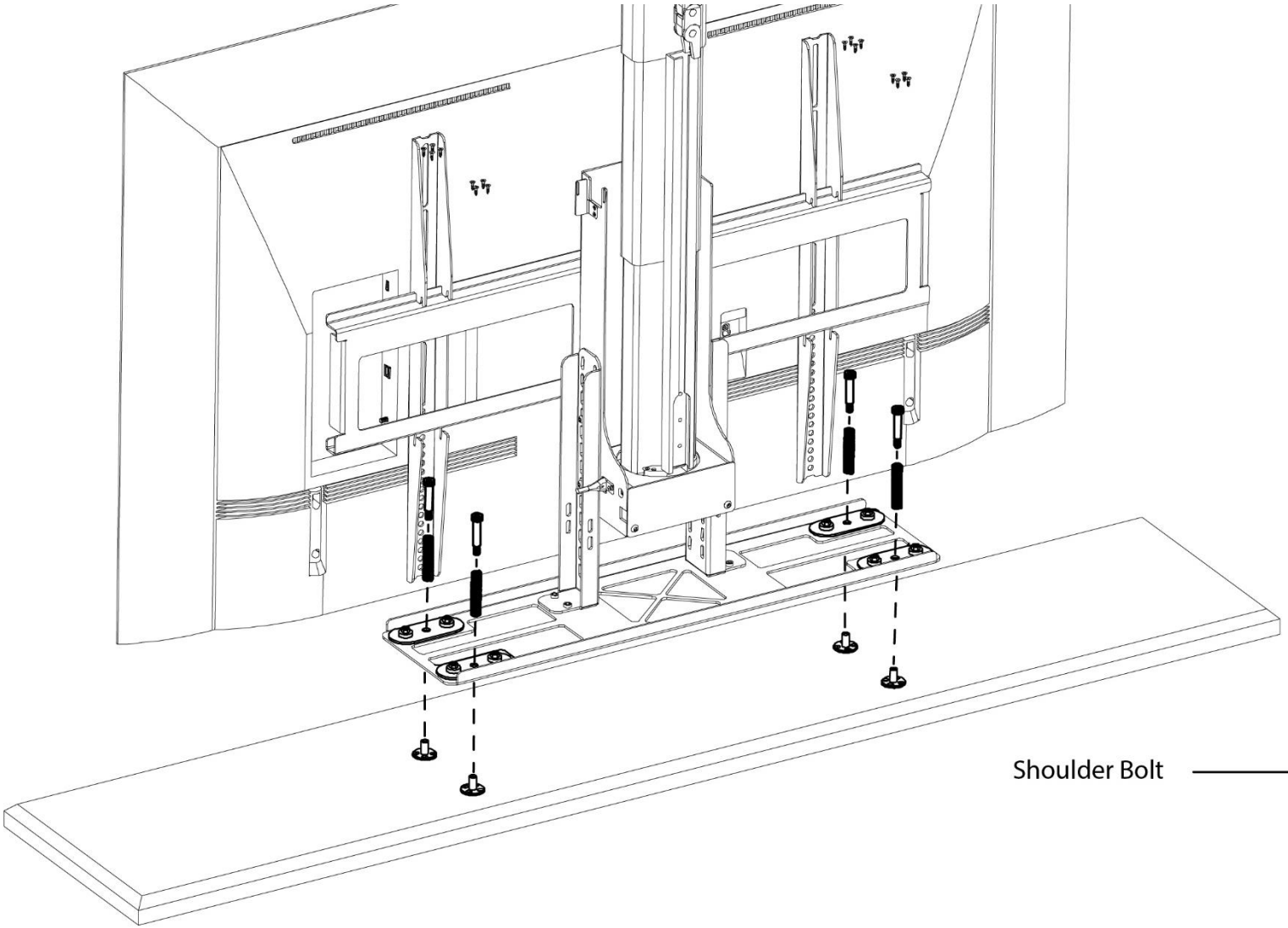

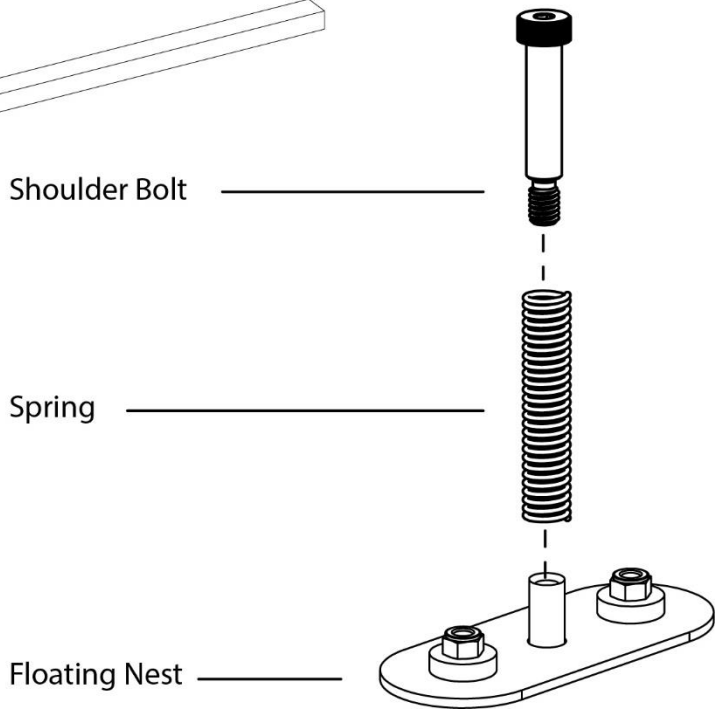

43a. Align the *Stabilization Mounts* with the *Floating Nests.*

43b. Slip (1) *2.5 LG Spring* over each of the *SHMS 5/16"-18 X 1-1/2 Screws.*

43c. Fasten the *Shoulder Bolt* to *Stabilization Mounts*

43d. Slightly loosen the Nut's on the *Floating Nests*, do not remove them.

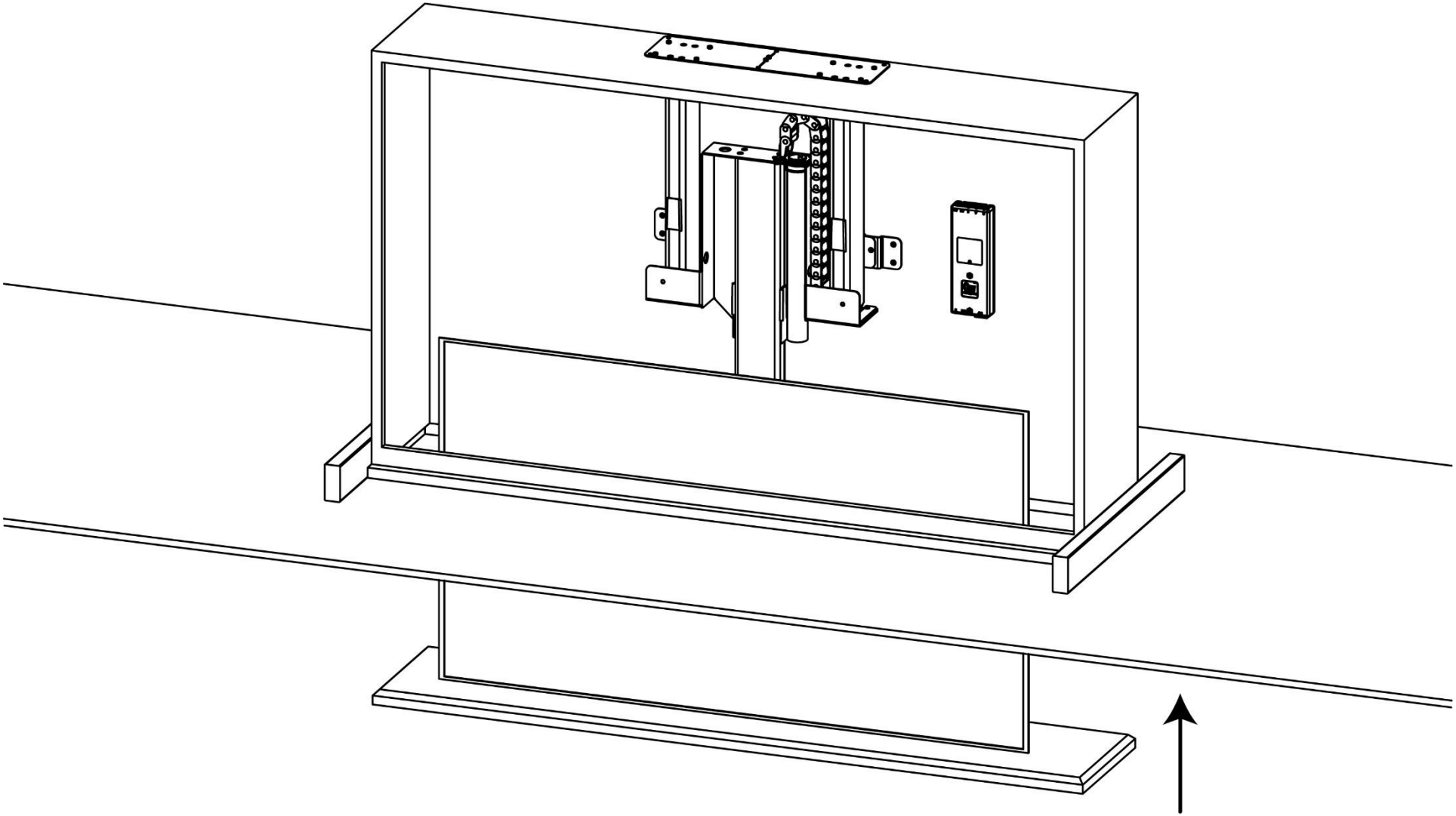

44a. Press the "Up" button on your remote to retract the lift into the ceiling and test the placement of your Lid. If needed, press the "Down" button to stop the system at any time.

44b. Adjust the position so that it is centered within your opening then extend it again.

44c. Tighten the Nuts on each of the *Floating Nests*, be sure to maintain the position of your lid as you tighten them.

Finishing Touches

Parts List:

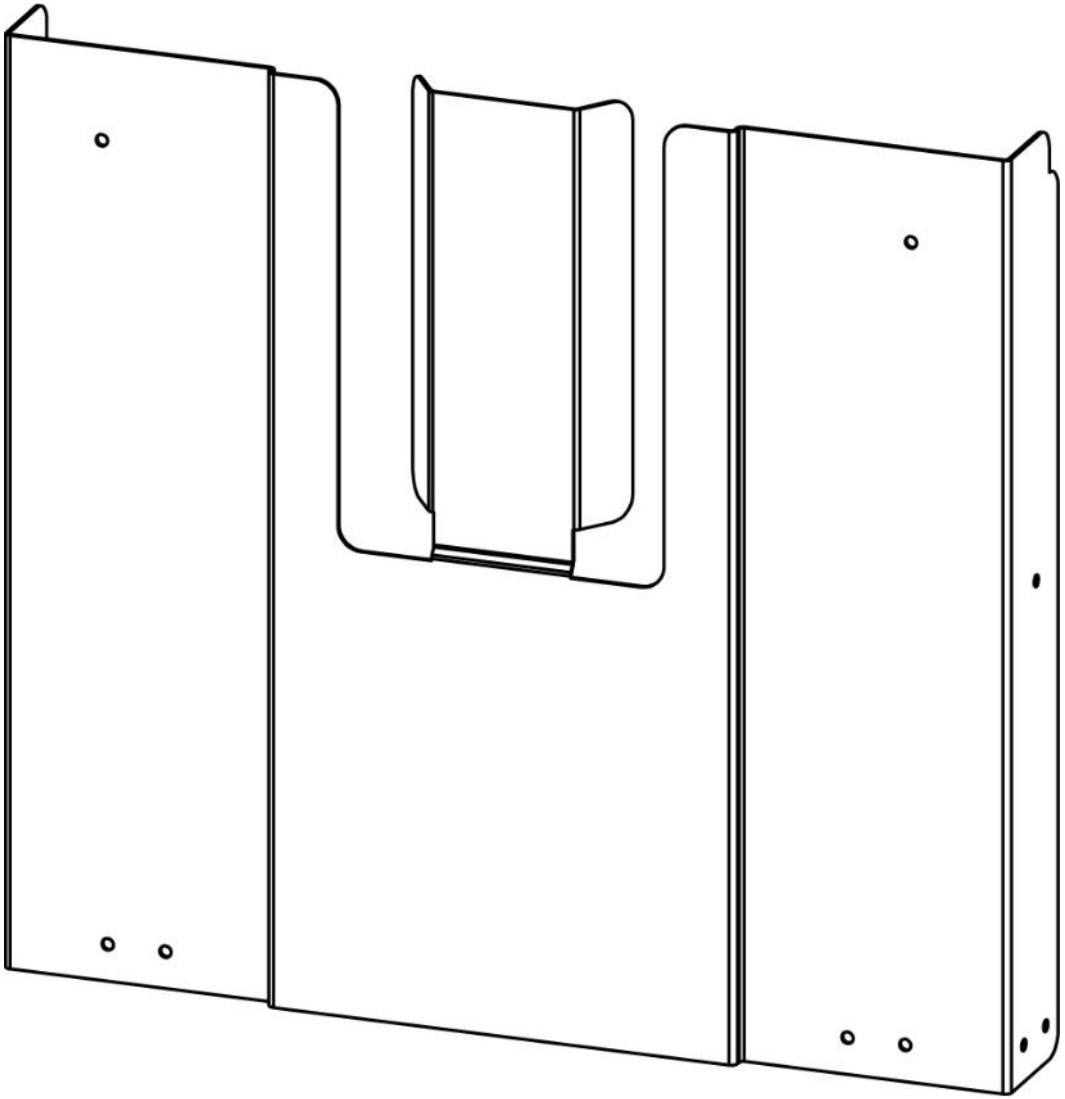

Required Hardware:

- Front Cover

- Front Cover Hardware
    - (2) – BHMS M6 x 10mm

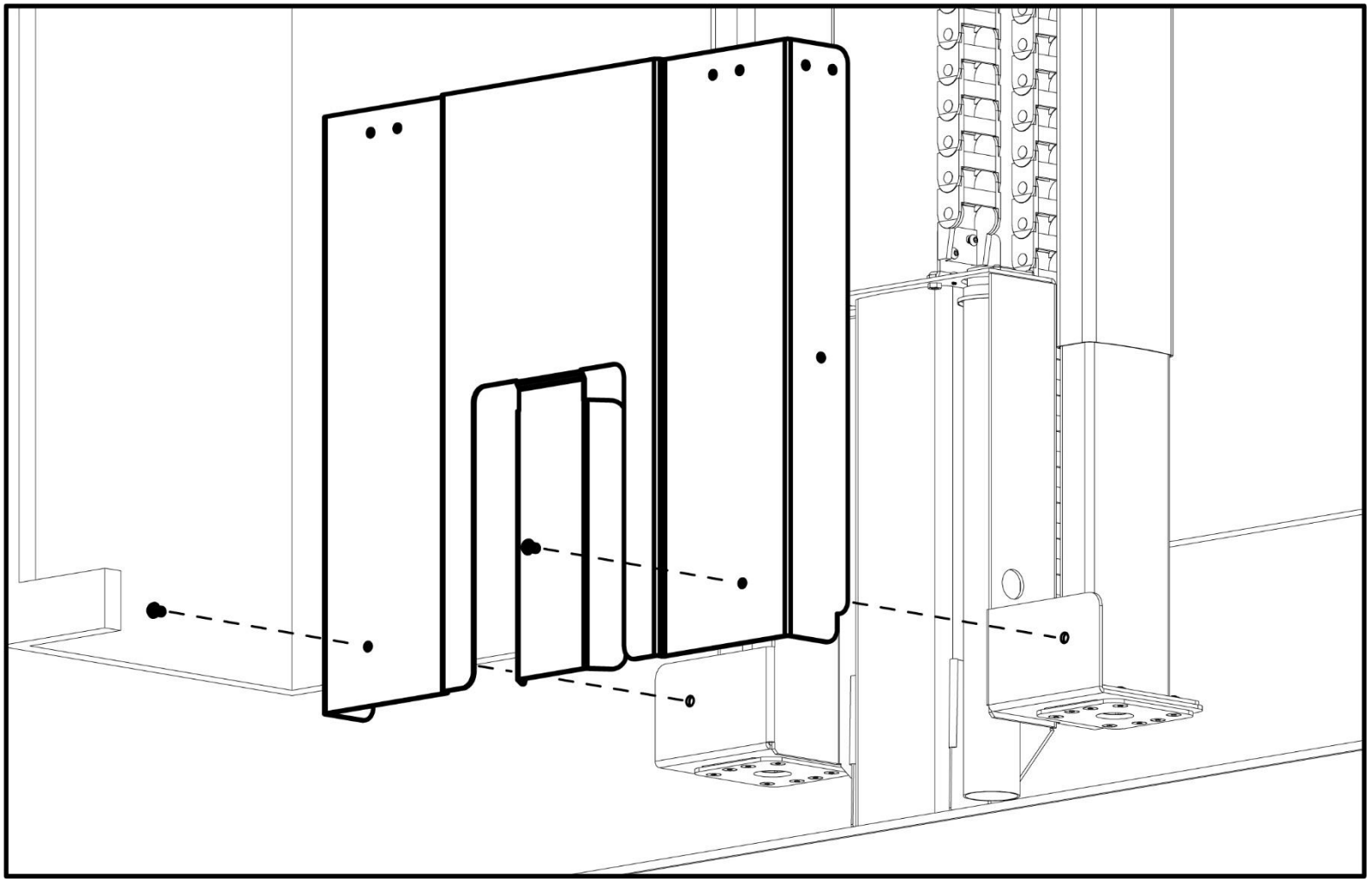

45. Fasten the *Front Cover* to the *Lower Assembly* using *(2) 6 x 10 BHMS Screws*.

Note: Be sure the *Snakeskin* does not protrude through the center opening of the *Front Cover* after you're done.

System Setup

Parts List:

Important Information

The L-75ix Lift System must always be configured with the provided RF Remote. DO NOT DISCARD.

There are four configurable positions for the L-75ix Lift System:

Max Left Swivel, Max Right Swivel, Preset 1, & Preset 2

- The default setting for the *Max Left Swivel* and *Max Right Swivel* is 180°. You can set the Max Left Swivel and Max Right Swivel to be a minimum of 5° up to a maximum of 180° or anything in-between.

- Preset 1 and Preset 2 are not pre-configured and must be set prior to use. The position of Preset 1 and Preset 2 are limited by the boundaries set by the Max Left Swivel and Max Right Swivel.

- The steps on the next page will walk you through configuring all four positions.

Setting the Maximum Extension:

46. Press the "Down" button to lower the system, then tap the "Up" button to stop it once it reaches your desired position.

47. Plug the *Height Limit Insert* into the available RJ45 port on the RF Receiver. (The Height Limit Insert is inside the RF Control Kit)

Important Note: The system must travel a minimum of 48" otherwise it will not allow your TV to swivel. If you are using the full extension of the system (52"), you do not need to connect the Height Limit Insert.

Setting the Max Left and Max Right Swivel:

The Max Swivel positions only need to be set when an obstruction is preventing the system from swiveling to a full 180 degrees.

48. Press and hold the "Left" button to rotate your TV then release it once the TV reaches your desired Max Left Swivel position.

49. Press and hold the "Down" and "Home" buttons simultaneously for 5 seconds then release. The Max Left Swivel has been set.

50. Press and hold the "Right" button to rotate your TV and release it once the TV reaches your desired Max Right Swivel position.

51. Press and hold the "Up" and "Home" buttons simultaneously for 5 seconds then release. The Max Right Swivel has been set.

Setting the Preset 1 and Preset 2 Positions:

52. Press and hold the "Left" or "Right" button to swivel the TV and release the button once the TV reaches your desired position.

53. Press and hold the "1" or "2" button for 5 seconds.

Note: The "Home" position is always pre-saved and cannot be changed. It will always be set at Center Swivel position and the lift fully retracted into the ceiling.

Important Note: If the Center, Max Left Swivel, or Max Right Swivel positions need to be reset, press and hold the "Left" and "Right" buttons simultaneously for 5 seconds to clear them. Once they have been cleared, follow the steps on Pg. 41to set the Center position followed by the steps on this page to set the Max Left and Max Right Swivel.

While the Center position is unknown, the Lift System will not retract into the ceiling.

Integration Information

The L-75ix can only be integrated with a Control System using IP Control. The IP Control Module will always be included with the purchase of the L-75ix Lift System. Refer to the included Nexus 21 IP Control User Guide for details regarding IP integration.

If you do not wish to integrate your L-75ix with a Control System, use the provided RF Remote to operate your system instead.

1-888-981-9919
www.nexus21.com